IAI
Quality and Innovation

HORIZONTAL ARTICULATED ROBOT IX

www.intelligentactuator.com

IX VISUAL INDEX
[SCARA Series]

Standard Type NNN

The standard type combines the best performance and user-friendliness in its class. The selectable arm length (250 mm to 800 mm) provides the flexibility to accommodate a wide range of applications.

High-Speed Type NSN

The high-speed type offers enhanced performance in high-speed operation by combining a high-output motor with the standard body. It helps reduce cycle times.

Dustproof/ Splash-proof Type NNW

The dustproof/splash-proof type adopts a protective structure conforming to IP65. This robot can be used in environments subject to powder dust or water splashes.

Wall-Mount Type TNN

This robot is mounted on a wall for operation. The space below the robot can be utilized effectively, so you will have more freedom in designing your equipment.

Wall-Mount Inverse Type UNN

P25

This robot is the same as the wall-mounting type (TNN), but it is installed upside down. UNN is ideal for applications where the robot must handle loads located above it.

Ceiling Mount Type HNN

P27

This robot is mounted on a ceiling for operation. The space below the robot can be utilized effectively, so you will have more freedom in designing your equipment.

Ceiling Mount Inverse Type (Tabletop Mount) INN

P27

This robot is the same as the ceiling mount type (HNN), but it is installed upside down. INN is ideal for applications where the robot must handle loads located above it.

Clean Room Type NNC

P31

This robot generates minimal particles and is ideal for operation in a clean room environment. The air inside the robot can be vacuumed if conformance to cleanliness class 10 is required.

New Horizontal Articulated Robot IX Series Achieves Class Top Performance and High Cost Performance

The IX Series achieved the best-in-class specification in every aspect—from high-speed performance and load capacity to positioning repeatability—after reviewing and redesigning all the components of the conventional IH Series robots. The IX Series also outdistances its rivals in user-friendliness, lineup and cost performance.

High-Performance

1. Highest Speed, Load Capacity and Accuracy in Its Class

Standard cycle time: 0.44 sec (*1)
Positioning repeatability: ±0.01 mm/±0.005° (*2)
Maximum load capacity: 20 kg (*3)

*1 The standard cycle time refers to the time required to cycle back and forth over a vertical distance of 25 mm and horizontal distance of 300 mm (rough positioning).
*2 If the arm length is 700/800, the repeatability becomes ±0.015 mm/±0.005°.
*3 Based on an arm length of 700/800.

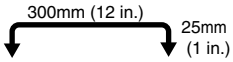

2. Compact and Rigid

The IX Series is significantly smaller compared with the conventional IH Series robots.

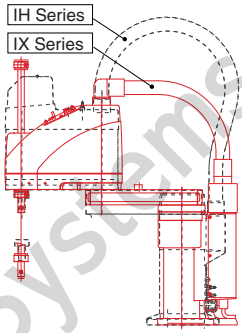

The IX Series achieved enhanced rigidity in a lightweight body by comprising arm 1 using aluminum extruded material. This helped reduce the inertial load.

3. Markedly Improved Tracing Accuracy and Interpolation Function

The IX Series offers a markedly improved tracing accuracy as a result of higher controller processing speed and rigid robot construction.
The robot can also perform three-dimensional arc/pass motions to allow for easy, accurate dispensing operation.

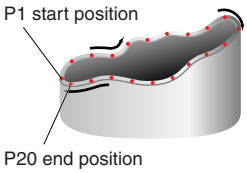

Command	Operand 1	Operand 2
PATH	P1	P20

Path movement that consists of many points can be implemented with a single program line.

Easy

4. Greater Ease of Use

An easy-to-use D-sub/25-pin connector is provided on top of the robot for user wiring. The user can also connect two ø4 tubes and two ø6 tubes to meet various tubing needs.
The brake-release switch on the robot lets you release the brake even when the controller power is off (*1).
The alarm indicator alerts you on each error generated in the robot (*2).

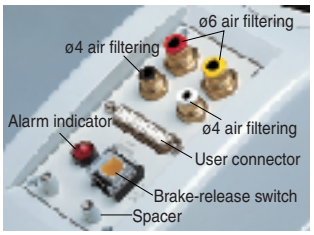

*1 24 VDC power must be supplied regardless of whether or not the brake-release switch is used.
*2 The alarm indicator must be wired by the user.

5. Easy Programming

The IX Series adopts Super SEL Language, a well-known command language used by IAI Cartesian robots. With Super SEL, complex operations can be programmed easily. You can create desired programs right away without much knowledge of robot language.

Plus α

6. Z-Axis Push Motion Function

The Z-axis (vertical axis) can be pressed against the load, so you can use the robot to press-fit loads or control push force.

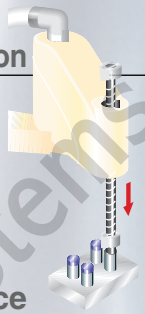

7. Simple Interference Check Zone Function

A maximum of 10 interference check zones can be set inside the robotís work envelope. When the load enters a check zone, the robot will inform you with a signal output. Use this function to conduct test operation at low speed.

* The load must remain inside a zone for at least 5 msec to ensure accurate detection.

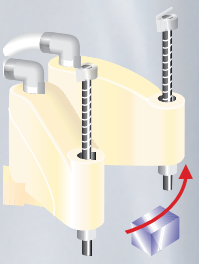

8. Complete Absolute Operation

All models adopt a 17-bit serial absolute encoder, so accurate positioning can be performed without homingeach time.
If a need arises, an absolute reset can be performed easily and accurately using a dedicated jig (refer to “Robot Options” on P. 8).

Variation

9. Widest Variations in the Industry

The IX Series provides the following six variations to choose from:
- Standard type
- High-speed type
- Clean room type
- Dustproof/splash-proof type
- Wall mount/inverse type
- Ceiling mount/inverse type

Select one that best suits your intended application.

Specifications

Type		Arm length (mm), maximum composite speed (mm/s)						Standard cycle time	Load capacity (*1)		Vertical axis stroke		Model	Page
		250 mm	350 mm	500 mm	600 mm	700 mm	800 mm	(sec)	Rated (kg)	Maximum (kg)	Standard (mm)	Optional (mm)		
Standard type NNN		3142 mm/s						0.46	1	3	150	-	IX-NNN2515	P11
			3979 mm/s					0.53	1	3	150	-	IX-NNN3515	P12
				6283 mm/s				0.44	2	10	200	300	IX-NNN5020(5030)	P13
					7121 mm/s			0.52	2	10	200	300	IX-NNN6020(6030)	P14
						6597 mm/s		0.50	5	20	200	400	IX-NNN7020(7040)	P15
							7121 mm/s	0.52	5	20	200	400	IX-NNN8020(8040)	P16
High-speed type NSN				4712 mm/s				0.29 to 0.30	1	3	160	-	IX-NSN5016	P17
					5236 mm/s			0.38 to 0.39	1	3	160	-	IX-NSN6016	P18
Dustproof/ splash-proof type NNW		3142 mm/s						0.51	1	3	150	-	IX-NNW2515	P19
			3979 mm/s					0.59	1	3	150	-	IX-NNW3515	P20
				6283 mm/s				0.49	2	10	200	300	IX-NNW5020(5030)	P21
					7121 mm/s			0.55	2	10	200	300	IX-NNW6020(6030)	P22
						6597 mm/s		0.52	5	20	200	400	IX-NNW7020(7040)	P23
							7121 mm/s	0.52	5	20	200	400	IX-NNW8020(8040)	P24
Wall-mount type TNN			3560 mm/s					0.49	1	3	150	-	IX-TNN3015	P25
			3979 mm/s					0.53	1	3	150	-	IX-TNN3515	P26
Wall-mount inverse type UNN			3560 mm/s					0.49	1	3	150	-	IX-UNN3015	P25
			3979 mm/s					0.53	1	3	150	-	IX-UNN3515	P26
Ceiling-mount type HNN				6283 mm/s				0.44	2	10	200	-	IX-HNN5020	P27
					7121 mm/s			0.52	2	10	200	-	IX-HNN6020	P28
						6597 mm/s		0.50	5	20	200	400	IX-HNN7020(7040)	P29
							7121 mm/s	0.52	5	20	200	400	IX-HNN8020(8040)	P30
Ceiling-mount inverse type INN				6283 mm/s				0.44	2	10	200	-	IX-INN5020	P27
					7121 mm/s			0.52	2	10	200	-	IX-INN6020	P28
						6597 mm/s		0.50	5	20	200	400	IX-INN7020(7040)	P29
							7121 mm/s	0.52	5	20	200	400	IX-INN8020(8040)	P30
Clean room type NNC		3142 mm/s						0.49	1	3	150	-	IX-NNC2515	P31
			3979 mm/s					0.58	1	3	150	-	IX-NNC3515	P32
				6283 mm/s				0.47	2	10	200	300	IX-NNC5020(5030)	P33
					7121 mm/s			0.54	2	10	200	300	IX-NNC6020(6030)	P34
						6597 mm/s		0.52	5	20	200	400	IX-NNC7020(7040)	P35
							7121 mm/s	0.52	5	20	200	400	IX-NNC8020(8040)	P36

(*1) The rated load capacity indicates the maximum load that can be carried at the maximum operating speed. The maximum load capacity indicates the maximum load that can be carried at a reduced acceleration rate.

IX Series Points to Note

<SCARA Type XI–NNN/NSN/NNW/TNN/UNN/HNN/INN/NNC>

(Note 1) Positioning repeatability

"Positioning repeatability" refers to the positioning accuracy of repeated movements to a pre-stored position. This is not the same as "absolute positioning accuracy."
The specified positioning repeatability is measured in an ambient temperature of 20˚C constant.

(Note 2) Maximum operating speed

The specified maximum operating speed represents the speed of PTP command operation.
High-speed movement will be limited in CP command operation (interpolation operation).

(Note 3) Standard cycle time

"Standard cycle time" refers to the time required to cycle back and forth over a vertical distance of 25 mm and horizontal distance of 300 mm (rough positioning).

<Caution>
The specified cycle time is based on a 2-kg load (5-kg load if the arm length is 700/800) and the maximum operating speed.
The robot cannot operate continuously at the maximum speed.

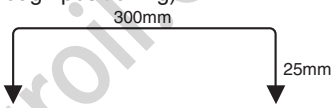

(Note 4) Axis 3 push force

"Axis 3 push force" represents the push force applied by the tip of the vertical axis. The value under "Push action" indicates the maximum push force to be applied when a programmed push command is executed. The value under "Maximum thrust" indicates the maximum thrust in a normal positioning operation. When a push action is performed during a normal positioning operation, a force corresponding to three times the maximum thrust may apply momentarily. When performing a push action, be sure to use a programmed push command.

(Note 5) Axis 4 allowable inertial moment

"Axis 4 allowable inertial moment" indicates the allowable inertial moment of axis 4 (rotating axis) of the SCARA robot as calculated at the center of rotation.
The offset from the center of rotation of axis 4 to the tool gravity center must be within 40 mm.
If the tool gravity center is further away from the center of axis 4, the speed and/or acceleration rate must be reduced as necessary.

(Note 6) Alarm indicator

The alarm indicator is located on top of arm 2 of the SCARA robot.
The alarm indicator can be wired in such a way that it will illuminate in a certain condition such as when the controller generates an error. To use the alarm indicator, the user must provide a circuit that responds to the controllerís I/O output signal to supply 24 VDC to the applicable LED terminal in the user wiring.

(Note 7) Brake-release switch

The brake-release switch is also located on top of the robotís arm 2 near the alarm indicator.
To release the brake, 24 VDC power must be supplied regardless of whether or not the brake-release switch is used. (Supply 24 VDC from a dedicated power supply separate from the 24 VDC power used for driving the I/Os.)

(Note 8) Cable length

The motor and encoder cables of the SCARA robot are directly connected to the robot.
The IX Series doesnít use a cable joint, so changing the cable length on the delivered robot will be difficult.
Select either 5 m (code 5L) or 10 m (10L) as the desired cable length when ordering.

(Note 9) Protection grade (protective structure)

This grade indicates the level of actuator protection against water and solid foreign matters.

IP65
- The actuator is protected against solid foreign matters to a degree where dust will not enter the actuator.
- The actuator is protected against water intrusion to a degree where the actuator will not be negatively affected by water injected at a given angle.

(Note 10) Air purge pressure

To use the dustproof/splash-proof type in an IP65 environment, air must be supplied from the air inlet located at side (or back) of the robot base (to perform air purge). The air purge pressure must conform to the common specification applicable to all robot types. (Supplied air must be clean, dry air of atmospheric pressure with a dew-point temperature of –20˚C or below.)

(Note 11) Internal vacuuming

To use the clean type in an environment of cleanliness class 10, the air inside the robot must be vacuumed from the air suction outlet located at side (or back) of the robot base.
The suction rate must conform to the common specification applicable to all robot types.

IX Series System Configuration Drawing

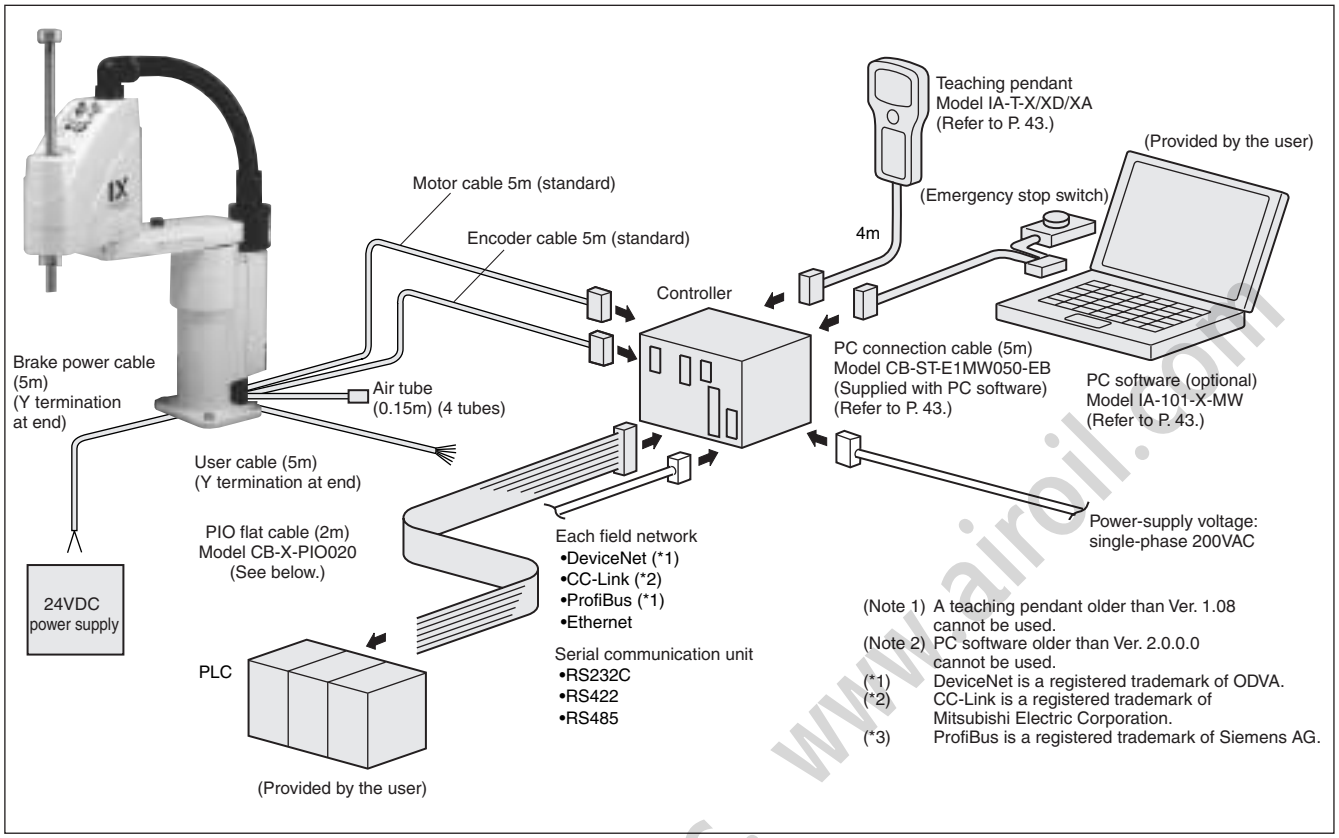

■ Robot Accessories

- Caution labels
- Positioning seals
- Eyebolts
- Service connectors

■ Controller Accessory

- PIO flat cable
  Model CB-X-PIO □□□

※□□□ Enter the desired cable length (L) of up to 10 m in ooo. Example) 080 = 8m

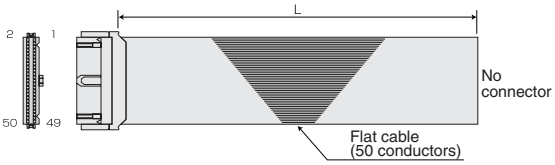

No.	Color	Wire	No.	Color	Wire	No.	Color	Wire
1	Brown 1	Flat cable	18	Gray 2	Flat cable	35	Green 4	Flat cable
2	Red 1		19	White 2		36	Blue 4	
3	Orange 1		20	Black 2		37	Purple 4	
4	Yellow 1		21	Brown 3		38	Gray 4	
5	Green 1		22	Red 3		39	White 4	
6	Blue 1		23	Orange 3		40	Black 4	
7	Purple 1		24	Yellow 3		41	Brown 5	
8	Gray 1		25	Green 3		42	Red 5	
9	White 1		26	Blue 3		43	Orange 5	
10	Black 1		27	Purple 3		44	Yellow 5	
11	Brown 2		28	Gray 3		45	Green 5	
12	Red 2		29	White 3		46	Blue 5	
13	Orange 2		30	Black 3		47	Purple 5	
14	Yellow 2		31	Brown 4		48	Gray 5	
15	Green 2		32	Red 4		49	White 5	
16	Blue 2		33	Orange 4		50	Black 5	
17	Purple 2		34	Yellow 4				

Robot Options

Name	Model	Description	Page
Absolute Data Storage Battery	AB-3	Battery for storing the encoder's absolute data	P8
Absolute Reset Adjustment Jig	JG-1~3	Jig needed to execute an absolute reset	
Flange	IX-FL-1~3	Flange used to install to the tip of the Z-axis	

Controller Options

Name			
Teaching Pendant	IA-T-X	Allows for input and editing of position data, programs, parameters, etc., as well as manual operations.	P43
Teaching Pendant (With Deadman Switch)	IA-T-XD	IA-T-X equipped with a deadman switch	
Teaching Pendant (ANSI)	IA-T-XA	CE/ANSI-compliant type	
PC Software (DOS/V)	IA-101-X-MW	Allows for input and editing of position data, programs, parameters, etc., as well as manual operations.	
PC Software (PC98)	IA-101-X-CW		

Robot Options

Absolute Data Backup Battery

This battery is used to store the encoderís absolute data.
(Install the battery inside the rear cover of the SCARA robot.)

Model	Remarks
AB-3	Common to all models

AB-3

Absolute Reset Adjustment Jig

An appropriate adjustment jig is used to execute an absolute reset when the encoderís absolute data was lost.

Model	Remarks
JG-1	Arm length 500/600
JG-2	Arm length 250/350
JG-3	Arm length 700/800

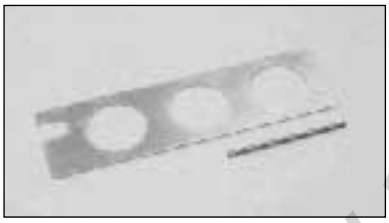

JG-1

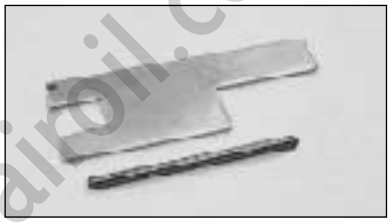

JG-2

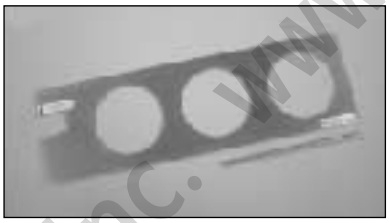

JG-3

Flange

Use an appropriate flange when mounting to the tip of the Z-axis arm.

Model	Remarks
IX-FL-1	Arm length 500/600
IX-FL-2	Arm length 250/350
IX-FL-3	Arm length 700/800

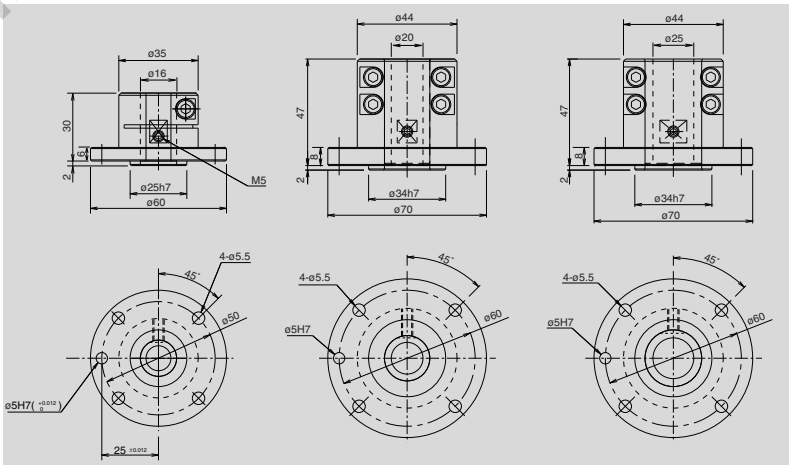

IX-FL-2 IX-FL-1 IX-FL-3

Unit Series Explanation of SCARA Robot Model Items

Refer to the opposite page for details on each model item (①through ⑧). The selection range for each item will vary depending on the robot type. For details, refer to the page corresponding to each model type.

		① Series		② Model		③ Cable length		④ Controller type		⑤ Standard PIO		⑥ Expansion I/O		⑦ I/O flat cable length		⑧ Power-supply voltage
1	SCARA robot, standard type	IX	—	NNN2515 NNN3515 NNN5020 NNN5030 NNN6020 NNN6030 NNN7020 NNN7040 NNN8020 NNN8040	—	5L 10L	—	KX JX	—	N1 N3 P1 P3 DV CC PR ET	—	EEE, etc.	—	2 3 5 0	—	2
2	SCARA robot, high-speed type		—	NSN5016 NSN6016	—		—		—		—		—		—	
3	SCARA robot, dustproof/ splash-proof type		—	NNW2515 NNW3515 NNW5020 NNW5030 NNW6020 NNW6030 NNW7020 NNW7040 NNW8020 NNW8040	—		—		—		—		—		—	
4	SCARA robot, wall-mount type (inverse type)		—	TNN3015 (UNN3015) TNN3515 (UNN3515)	—		—		—		—		—		—	
5	SCARA robot, ceiling-mount type (inverse type)		—	HNN5020 (INN5020) HNN6020 (INN6020) HNN7020 (INN7020) HNN7040 (INN7040) HNN8020 (INN8020) HNN8040 (INN8040)	—		—		—		—		—		—	
6	SCARA robot, clean room type		—	NNC2515 NNC3515 NNC5020 NNC5030 NNC6020 NNC6030 NNC7020 NNC7040 NNC8020 NNC8040	—		—		—		—		—		—	

Unlike other models, the SCARA robot is ordered as a combination of robot and controller.
Items ① through ③ specify the SCARA robot.
Items ④ through ⑧ specify the controller.

① Series

Indicate the name of each series.

② Model

Indicate the model type (standard, high-speed, dustproof/splash-proof, wall-mount or ceiling-mount), arm length and Z-axis length.

NNN	Standard type	UNN	Wall-mount type (inverse type)
NSN	High-speed type	HNN	Ceiling-mount type
NNW	Dustproof/splash-proof type	INN	Ceiling-mount type (inverse type)
TNN	Wall-mount type		

③ Cable length

Indicate the length of the cable connecting the robot and the controller.
Select either 5L (5 m) or 10L (10 m).
Unlike a single-axis robot, the IX Series doesnít adopt a joint cable.
The cable comes out directly from the robot.

④ Controller type

Select a dedicated controller (KX or JX type) for the SCARA robot.
* Only the KX type may be specified if the arm length is 500 or longer.

⑤ Standard PIO specification

Indicate the specification of the controllerís standard I/O slot.
* N3 and P3 are dedicated options for the JX controller and cannot be specified for the KX controller.

N1 : [NPN standard PIO] An NPN PIO board with 32 input points and 16 output points is installed (standard).
N3 : [NPN multipoint PIO] An NPN multipoint PIO board with 48 input points and 48 output points is installed (dedicated option for the JX controller).
P1 : [PNP standard PIO] A PNP PIO board with 32 input points and 16 output points is installed.
P3 : [PNP multipoint PIO] A PNP multipoint PIO board with 48 input points and 48 output points is installed (dedicated option for the JX controller).
DV : [DeviceNet connection specification] A DeviceNet connection board with a maximum of 256 input points and 256 output points is installed.
CC : [CC-Link connection specification] A CC-Link connection board with a maximum of 256 input points and 256 output points is installed.
PR : [ProfiBus connection specification] A ProfiBus connection board with a maximum of 256 input points and 256 output points is installed.
ET : [Ethernet connection specification] An Ethernet connection board offering data communication capability is installed.

⑥ Expansion I/O specification

Indicate the specification of the controllerís expansion slot.
An expansion board can be installed in slot 1, 2 or 3 of the KX controller, or in slot 1 of the JX controller.
Use a three-digit code (EEE) to specify the slot type. In the case of the JX controller having only one expansion slot, specify the slot using the first digit and leave “E” in the remaining two digits (□EE).
* C, N3, P3, SA, SB and SC are dedicated options for the KX controller and cannot be specified for the JX controller.

E : [Unused] Expansion board is not used.
C : [CC-Link connection specification] A CC-Link connection board with 16 input points and 16 output points is installed (dedicated option for the KX controller).
N1 : [NPN expansion PIO] An NPN PIO board with 32 input points and 16 output points is installed.
N2 : [NPN expansion PIO] An NPN PIO board with 16 input points and 32 output points is installed.
N3 : [NPN multipoint PIO] An NPN multipoint PIO board with 48 input points and 48 output points is installed (dedicated option for the KX controller).
P1 : [PNP expansion PIO] A PNP PIO board with 32 input points and 16 output points is installed.
P2 : [PNP expansion PIO] A PNP PIO board with 16 input points and 32 output points is installed.
P3 : [PNP expansion PIO] A PNP PIO board with 48 input points and 48 output points is installed (dedicated option for the KX controller).
SA : [Expansion SIO type A] An RS232C communication board is installed (dedicated option for the KX controller).
SB : [Expansion SIO type B] An RS422 communication board is installed (dedicated option for the KX controller).
SC : [Expansion SIO type C] An RS485 communication board is installed (dedicated option for the KX controller).

⑦ I/O flat cable length

Indicate the length of the cable used for transmitting signals between the controller and the PLC.
One cable is supplied with one I/O board installed in the standard slot or each expansion slot.
2: 2m
3: 3m
5: 5m
0: None (Specify this number if you have installed a network board instead of a standard I/O board.)

⑧ Power-supply voltage

Indicate the main power-supply voltage for the controller.
The power-supply voltage is fixed to single-phase 200 VAC for a SCARA controller.

IX-NNN2515

Small SCARA Robot Standard Type: Arm Length 250mm, Vertical (Z) Axis 150mm

Type / Standard type | Arm length / 250mm | Load capacity / 1kg rated/3kg maximum

■ Model items: Series – Model – Cable length – Controller type – Standard I/O – Expansion I/O – I/O cable length – Power-supply voltage

(Example) IX – NNN2515 – 5L – KX – N1 – EEE – 2 – 2

* Refer to P. 10 for details on the model items.

* The above model code represents a combination of robot and controller.

Model/Specifications

Model	Axis configuration		Arm length (mm)	Motor capacity (W)	Work envelope	Positioning repeatability (mm) (Note 1)	Maximum operating speed (Note 2)	Standard cycle time (sec) (Note 3)	Load capacity (kg)		Axis 3 push force (N)		Axis 4 allowable load	
									Rated	Maximum	Push action (Note 4)	Maximum thrust (Note 4)	Allowable inertial moment (kg•m²) (Note 5)	Allowable torque (N•m)
IX–NNN2515–5L–□–□–□–□–2	Axis 1	Arm 1	125	200	±120°	±0.010	3142mm/s (Composite speed)	0.46	1	3	65.3	90.9	0.015	1.9
	Axis 2	Arm 2	125	100	±130°									
	Axis 3	Vertical axis	—	100	150mm	±0.010	1106mm/s							
	Axis 4	Rotating axis	—	50	±360°	±0.005	360°/s							

* In the above model code, specify the desired controller in □. For details, refer to "Explanation of SCARA Robot Model Items" (P. 10).

Common Specifications

Encode type	Absolute
User wiring	15-conductor AWG26 D-sub/15-pin connector with shield (socket)
User tubing	Air tube (O.D. ø4, I.D. ø2.5) x 3 (Normal working pressure 0.8MPa)
Alarm indicator (Note 6)	Red, small LED indicator x 1 (24 VDC must be supplied.)
Brake-release switch (Note 7)	Brake-release switch to prevent the vertical axis from dropping (24 VDC must be supplied.)

Ambient temperature/humidity	Temperature: 0~40°C, humidity: 20~85%RH or below (non-condensing)
Robot weight	17.1kg
Cable length (Note 8)	5L: 5m (standard), 10L: 10m (optional)

Dimensions

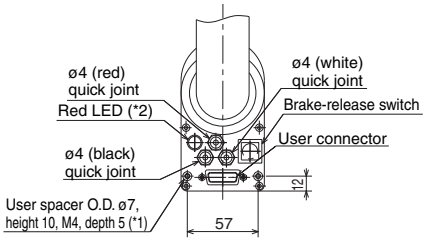

Detail view of panel

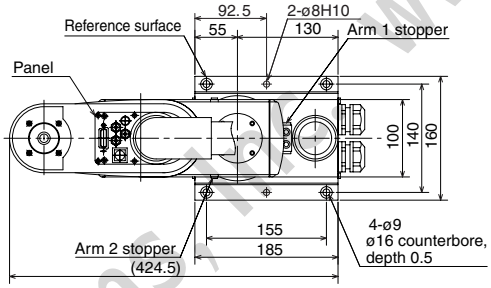

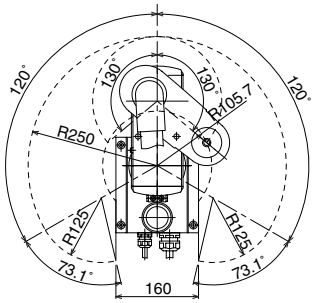

Work envelope

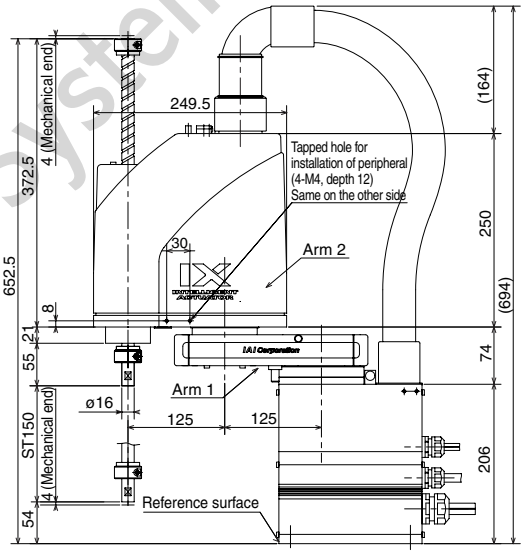

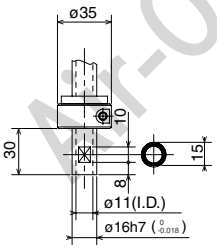

Detail view of tip

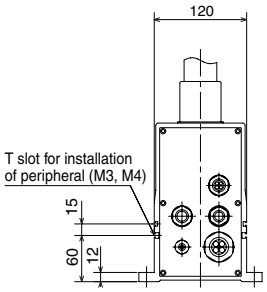

*1: The external force applied to each spacer must not exceed 30 N in the axial direction or 2 N•m in the rotating direction.
*2: To use the LED, the user must provide a circuit that takes signals from the controller's I/O output and supplies 24 VDC to the applicable LED terminal in the user connector.

Cables/tubes
- Motor/encoder cable 5m/10m
- Brake power cable 5m/10m
- User cable 5m/10m
- Air tube (3 pcs) 0.15m

Applicable Controller Specifications

Applicable controller	Features	Maximum I/O points (inputs/outputs)	Serial communication unit	Power-supply voltage	Page
XSEL-KX	General-purpose type offering excellent expandability	176/160 points	Can be installed.	AC200V	P37
XSEL-JX	Compact, space-saving type	80/64 points	Cannot be installed.		P37

Caution Refer to P. 6 for the explanations of (Note 1) to (Note 8).

IX-NNN3515

Small SCARA Robot Standard Type: Arm Length 350mm, Vertical (Z) Axis 150mm

Type / Standard type | Arm length / 350mm | Load capacity / 1kg rated/3kg maximum

■ Model items: Series – Model – Cable length – Controller type – Standard I/O – Expansion I/O – I/O cable length – Power-supply voltage

(Example) IX – NNN3515 – 5L – KX – N1 – EEE – 2 – 2

* Refer to P. 10 for details on the model items.

* The above model code represents a combination of robot and controller.

Model/Specifications

Model	Axis configuration		Arm length (mm)	Motor capacity (W)	Work envelope	Positioning repeatability (mm) (Note 1)	Maximum operating speed (Note 2)	Standard cycle time (sec) (Note 3)	Load capacity (kg)		Axis 3 push force (N)		Axis 4 allowable load	
									Rated	Maximum	Push action (Note 4)	Maximum thrust (Note 4)	Allowable inertial moment (kg•m²) (Note 5)	Allowable torque (N•m)
IX–NNN3515–5L–□–□–□–□–2	Axis 1	Arm 1	225	200	±120°	±0.010	3979mm/s (Composite speed)	0.53	1	3	65.3	90.9	0.015	1.9
	Axis 2	Arm 2	125	100	±135°									
	Axis 3	Vertical axis	—	100	150mm	±0.010	1106mm/s							
	Axis 4	Rotating axis	—	50	±360°	±0.005	1600°/s							

* In the above model code, specify the desired controller in □. For details, refer to "Explanation of SCARA Robot Model Items" (P. 10).

Common Specifications

Encode type	Absolute
User wiring	15-conductor AWG26 D-sub/15-pin connector with shield (socket)
User tubing	Air tube (O.D. ø4, I.D. ø2.5) x 3 (Normal working pressure 0.8MPa)
Alarm indicator (Note 6)	Red, small LED indicator x 1 (24 VDC must be supplied.)
Brake-release switch (Note 7)	Brake-release switch to prevent the vertical axis from dropping (24 VDC must be supplied.)

Ambient temperature/humidity	Temperature: 0~40°C, humidity: 20~85%RH or below (non-condensing)
Robot weight	18.2kg
Cable length (Note 8)	5L: 5m (standard), 10L: 10m (optional)

Dimensions

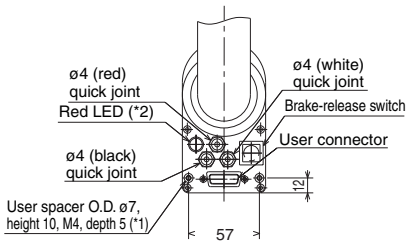

Detail view of panel

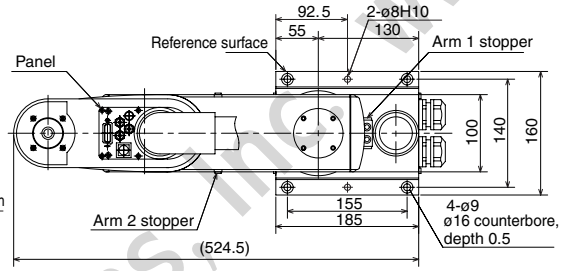

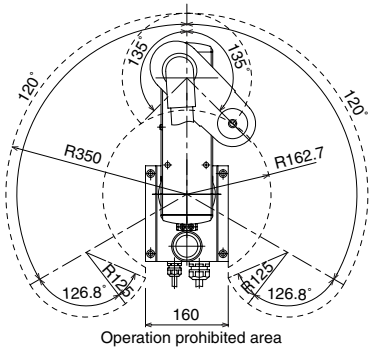

Work envelope

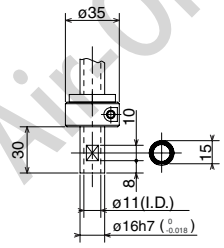

Detail view of tip

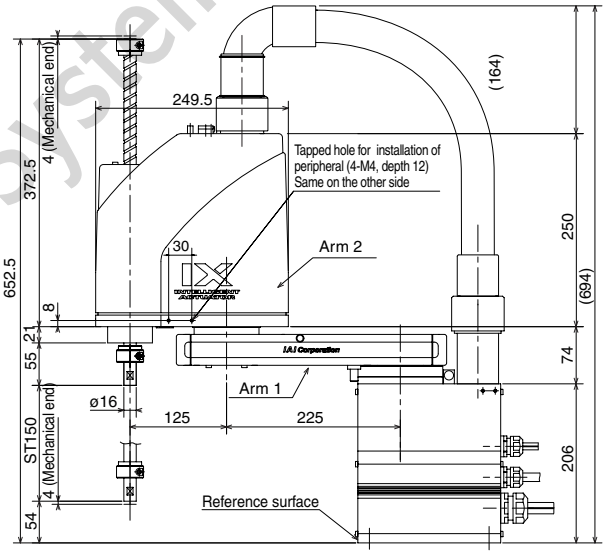

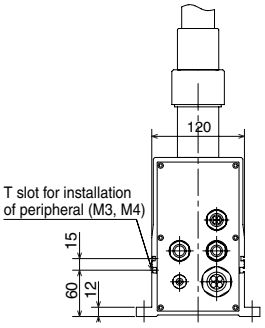

*1: The external force applied to each spacer must not exceed 30 N in the axial direction or 2 N•m in the rotating direction.
*2: To use the LED, the user must provide a circuit that takes signals from the controller's I/O output and supplies 24 VDC to the applicable LED terminal in the user connector.

Cables/tubes
- Motor/encoder cable 5m/10m
- Brake power cable 5m/10m
- User cable 5m/10m
- Air tube (3 pcs) 0.15m

Applicable Controller Specifications

Applicable controller	Features	Maximum I/O points (inputs/outputs)	Serial communication unit	Power-supply voltage	Page
XSEL-KX	General-purpose type offering excellent expandability	176/160 points	Can be installed.	AC200V	P37
XSEL-JX	Compact, space-saving type	80/64 points	Cannot be installed.		P37

Caution Refer to P. 6 for the explanations of (Note 1) to (Note 8).

IX-NNN50□□

IX Medium SCARA Robot Standard Type:
Arm Length 500mm, Vertical (Z) Axis 200mm (300mm)

Type	Arm length	Load capacity
Standard type	500mm	2kg rated/10kg maximum

■ Model items

	Series	Model	Cable length	Controller type	Standard I/O	Expansion I/O	I/O cable length	Power-supply voltage
(Example)	IX	NNN5020	5L	KX	N1	EEE	2	2

* Refer to P. 10 for details on the model items.
* The above model code represents a combination of robot and controller.

Model/Specifications

Model	Axis configuration		Arm length (mm)	Motor capacity (W)	Work envelope	Positioning repeatability (mm) (Note 1)	Maximum operating speed (Note 2)	Standard cycle time (sec) (Note 3)	Load capacity (kg)		Axis 3 push force (N)		Axis 4 allowable load	
									Rated	Maximum	Push action (Note 4)	Maximum thrust (Note 4)	Allowable inertial moment (kg•m²) (Note 5)	Allowable torque (N•m)
IX–NNN5020–5L–KX–□–□–□–2 [IX–NNN5030–5L–KX–□–□–□–2]	Axis 1	Arm 1	250	400	±120°	±0.010	6283mm/s (Composite speed)	0.44	2	10	108	152	0.06	3.3
	Axis 2	Arm 2	250	200	±145°									
	Axis 3	Vertical axis	—	200	200mm [300mm]	±0.010	1393mm/s							
	Axis 4	Rotating axis	—	100	±360°	±0.005	1200°/s							

* In the above model code, specify the desired controller in □. For details, refer to "Explanation of SCARA Robot Model Items" (P. 10).

Common Specifications

Encode type	Absolute
User wiring	25-conductor AWG26 D-sub/25-pin connector with shield (socket)
User tubing	Air tube (O.D. ø6, I.D. ø4) x 2 (Normal working pressure 0.8MPa) Air tube (O.D. ø4, I.D. ø2.5) x 2 (Normal working pressure 0.8MPa)
Alarm indicator (Note 6)	Red, small LED indicator x 1 (24 VDC must be supplied.)
Brake-release switch (Note 7)	Brake-release switch to prevent the vertical axis from dropping (24 VDC must be supplied.)

Ambient temperature/humidity	Temperature: 0~40°C, humidity: 20~85%RH or below (non-condensing)
Robot weight	29.5kg
Cable length (Note 8)	5L: 5m (standard), 10L: 10m (optional)

Dimensions

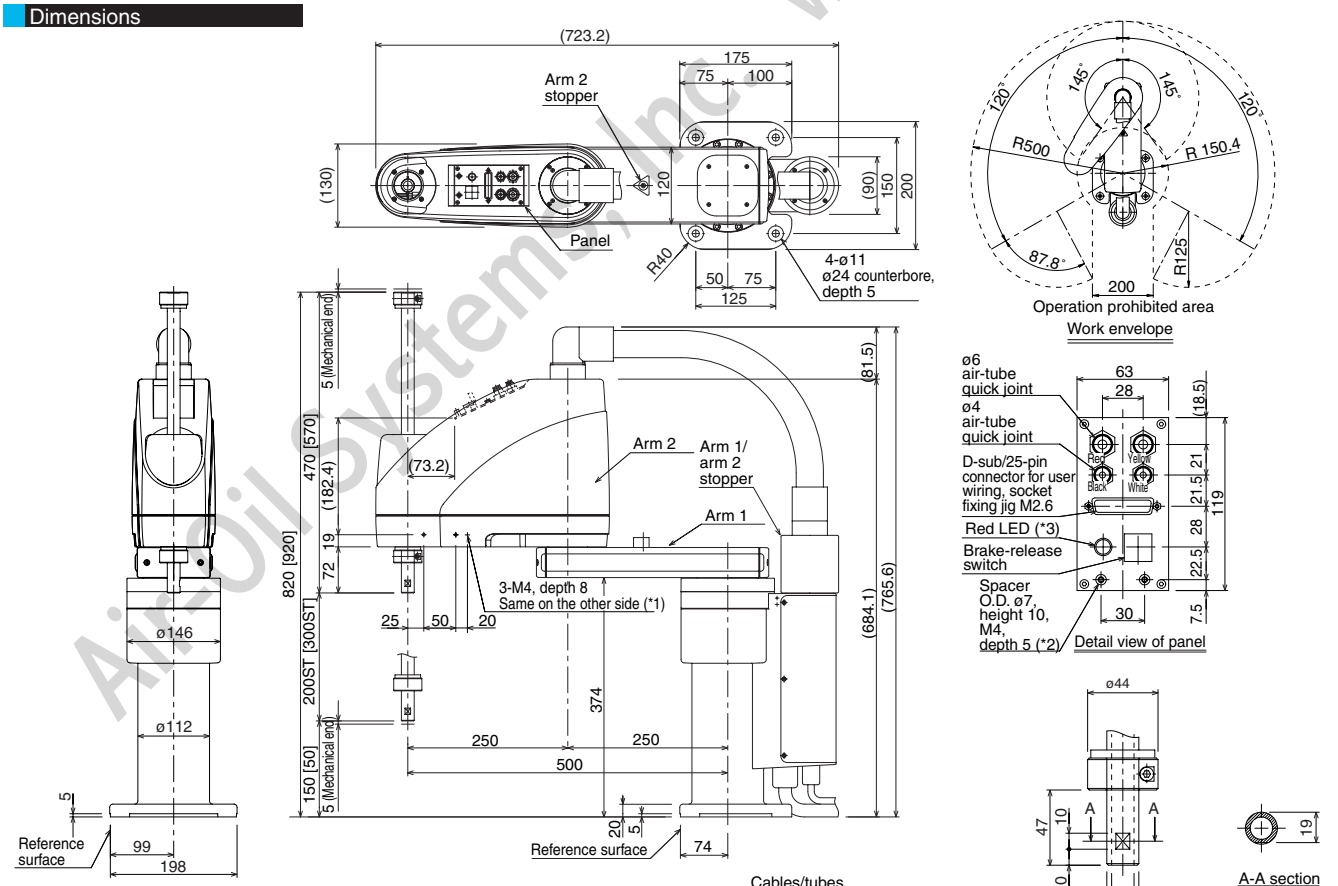

*1: The prepared hole 3-M4, depth 8 passes through the side panel of the arm.
A long mounting screw will contact the mechanical parts inside the arm, so exercise caution.
*2: The external force applied to each spacer must not exceed 30 N in the axial direction or 2 N•m in the rotating direction.
*3: To use the LED, the user must provide a circuit that takes signals from the controller's I/O output and supplies 24 VDC to the applicable LED terminal in the user connector.

Cables/tubes
- Motor/encoder cable 5m/10m
- Brake power cable 5m/10m
- User cable 5m/10m
- Air tube (3 pcs) 0.15m

Applicable Controller Specifications

Applicable controller	Features	Maximum I/O points (inputs/outputs)	Serial communication unit	Power-supply voltage	Page
XSEL-KX	General-purpose type offering excellent expandability	176/160 points	Can be installed.	AC200V	P37

Caution Refer to P. 6 for the explanations of (Note 1) to (Note 8).

IX-NNN60□□

IX Medium SCARA Robot Standard Type:
Arm Length 600mm, Vertical (Z) Axis 200mm (300mm)

Type / Standard type | Arm length / 600mm | Load capacity / 2kg rated/10kg maximum

■ Model items

	Series	Model	Cable length	Controller type	Standard I/O	Expansion I/O	I/O cable length	Power-supply voltage
(Example)	IX	NNN6020	5L	KX	N1	EEE	2	2

* Refer to P. 10 for details on the model items.
* The above model code represents a combination of robot and controller.

Model/Specifications

Model	Axis configuration		Arm length (mm)	Motor capacity (W)	Work envelope	Positioning repeatability (mm) (Note 1)	Maximum operating speed (Note 2)	Standard cycle time (sec) (Note 3)	Load capacity (kg)		Axis 3 push force (N)		Axis 4 allowable load	
									Rated	Maximum	Push action (Note 4)	Maximum thrust (Note 4)	Allowable inertial moment (kg•m²) (Note 5)	Allowable torque (N•m)
IX–NNN6020–5L–KX–□–□–□–2 [IX–NNN6030–5L–KX–□–□–□–2]	Axis 1	Arm 1	350	400	±120°	±0.010	7121mm/s (Composite speed)	0.52	2	10	108	152	0.06	3.3
	Axis 2	Arm 2	250	200	±145°									
	Axis 3	Vertical axis	—	200	200mm [300mm]	±0.010	1393mm/s							
	Axis 4	Rotating axis	—	100	±360°	±0.005	1200°/s							

* In the above model code, specify the desired controller in □. For details, refer to "Explanation of SCARA Robot Model Items" (P. 10).

Common Specifications

Encode type	Absolute
User wiring	25-conductor AWG26 D-sub/25-pin connector with shield (socket)
User tubing	Air tube (O.D. ø6, I.D. ø4) x 2 (Normal working pressure 0.8MPa) Air tube (O.D. ø4, I.D. ø2.5) x 2 (Normal working pressure 0.8MPa)
Alarm indicator (Note 6)	Red, small LED indicator x 1 (24 VDC must be supplied.)
Brake-release switch (Note 7)	Brake-release switch to prevent the vertical axis from dropping (24 VDC must be supplied.)

Ambient temperature/humidity	Temperature: 0~40°C, humidity: 20~85%RH or below (non-condensing)
Robot weight	30.5kg
Cable length (Note 8)	5L: 5m (standard), 10L: 10m (optional)

Dimensions

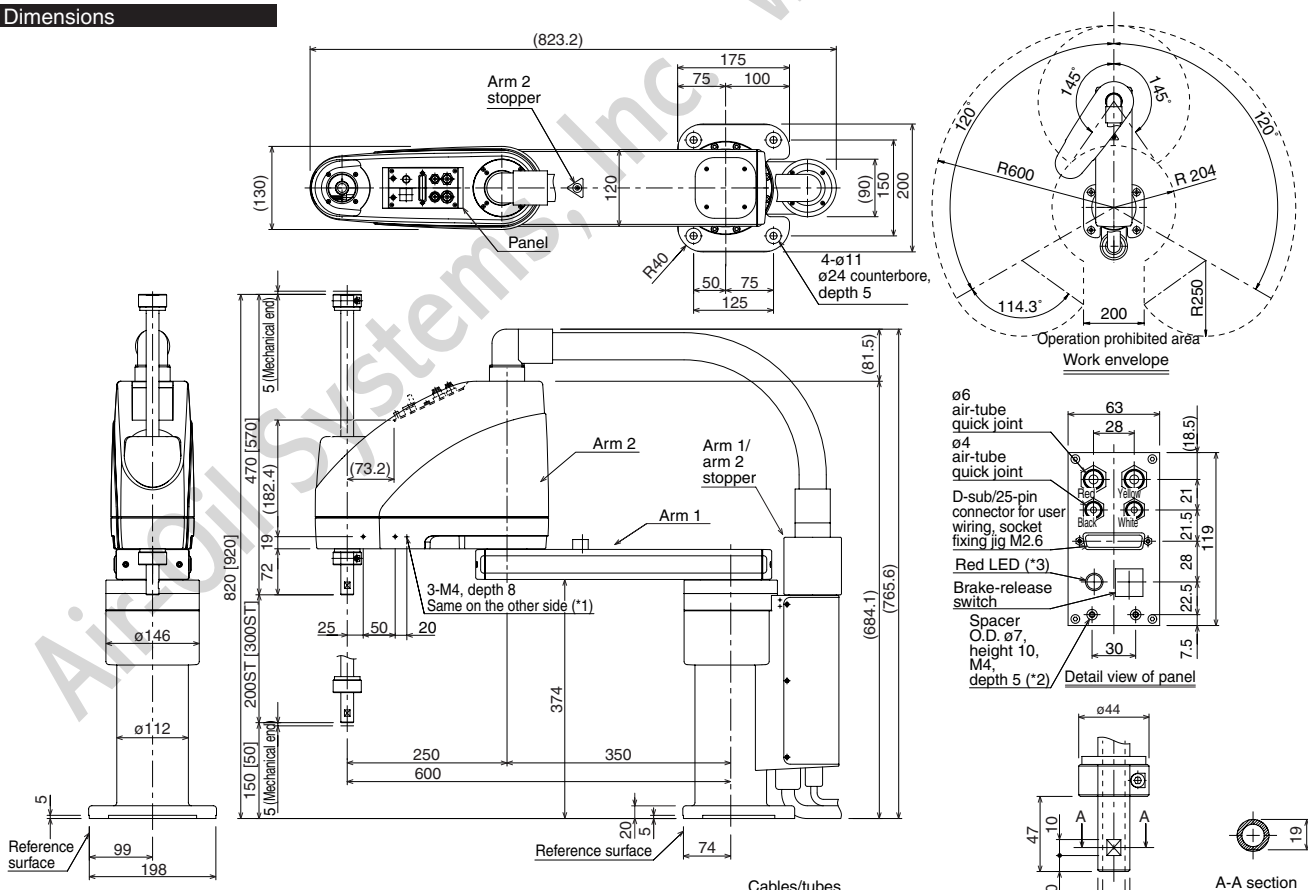

*1: The prepared hole 3-M4, depth 8 passes through the side panel of the arm. A long mounting screw will contact the mechanical parts inside the arm, so exercise caution.
*2: The external force applied to each spacer must not exceed 30 N in the axial direction or 2 N•m in the rotating direction.
*3: To use the LED, the user must provide a circuit that takes signals from the controller's I/O output and supplies 24 VDC to the applicable LED terminal in the user connector.

Cables/tubes
- Motor/encoder cable 5m/10m
- Brake power cable 5m/10m
- User cable 5m/10m
- Air tube (3 pcs) 0.15m

Applicable Controller Specifications

Applicable controller	Features	Maximum I/O points (inputs/outputs)	Serial communication unit	Power-supply voltage	Page
XSEL-KX	General-purpose type offering excellent expandability	176/160 points	Can be installed.	AC200V	P37

Caution Refer to P. 6 for the explanations of (Note 1) to (Note 8).

IX-NNN70□□

IX Large SCARA Robot Standard Type:
Arm Length 700mm, Vertical (Z) Axis 200mm (400mm)

Type: Standard type | Arm length: 700mm | Load capacity: 5kg rated/20kg maximum

■ Model items: Series – Model – Cable length – Controller type – Standard I/O – Expansion I/O – I/O cable length – Power-supply voltage

(Example) IX – NNN7020 – 5L – KX – N1 – EEE – 2 – 2

* Refer to P. 10 for details on the model items.
* The above model code represents a combination of robot and controller.

Model/Specifications

Model	Axis configuration		Arm length (mm)	Motor capacity (W)	Work envelope	Positioning repeatability (mm) (Note 1)	Maximum operating speed (Note 2)	Standard cycle time (sec) (Note 3)	Load capacity (kg)		Axis 3 push force (N)		Axis 4 allowable load	
									Rated	Maximum	Push action (Note 4)	Maximum thrust (Note 4)	Allowable inertial moment (kg•m²) (Note 5)	Allowable torque (N•m)
IX–NNN7020–5L–KX–□–□–□–2 [IX–NNN7040–5L–KX–□–□–□–2]	Axis 1	Arm 1	350	750	±125°	±0.015	6597mm/s (Composite speed)	0.50	5	20	188	265	0.1	6.7
	Axis 2	Arm 2	350	400	±145°									
	Axis 3	Vertical axis	—	400	200mm [400mm]	±0.010	1583mm/s							
	Axis 4	Rotating axis	—	200	±360°	±0.005	1200°/s							

* In the above model code, specify the desired controller in □. For details, refer to "Explanation of SCARA Robot Model Items" (P. 10).

Common Specifications

Encode type	Absolute
User wiring	25-conductor AWG26 D-sub/25-pin connector with shield (socket)
User tubing	Air tube (O.D. ø6, I.D. ø4) x 2 (Normal working pressure 0.8MPa) Air tube (O.D. ø4, I.D. ø2.5) x 2 (Normal working pressure 0.8MPa)
Alarm indicator (Note 6)	Red, small LED indicator x 1 (24 VDC must be supplied.)
Brake-release switch (Note 7)	Brake-release switch to prevent the vertical axis from dropping (24 VDC must be supplied.)

Ambient temperature/humidity	Temperature: 0~40°C, humidity: 20~85%RH or below (non-condensing)
Robot weight	58kg
Cable length (Note 8)	5L: 5m (standard), 10L: 10m (optional)

Dimensions

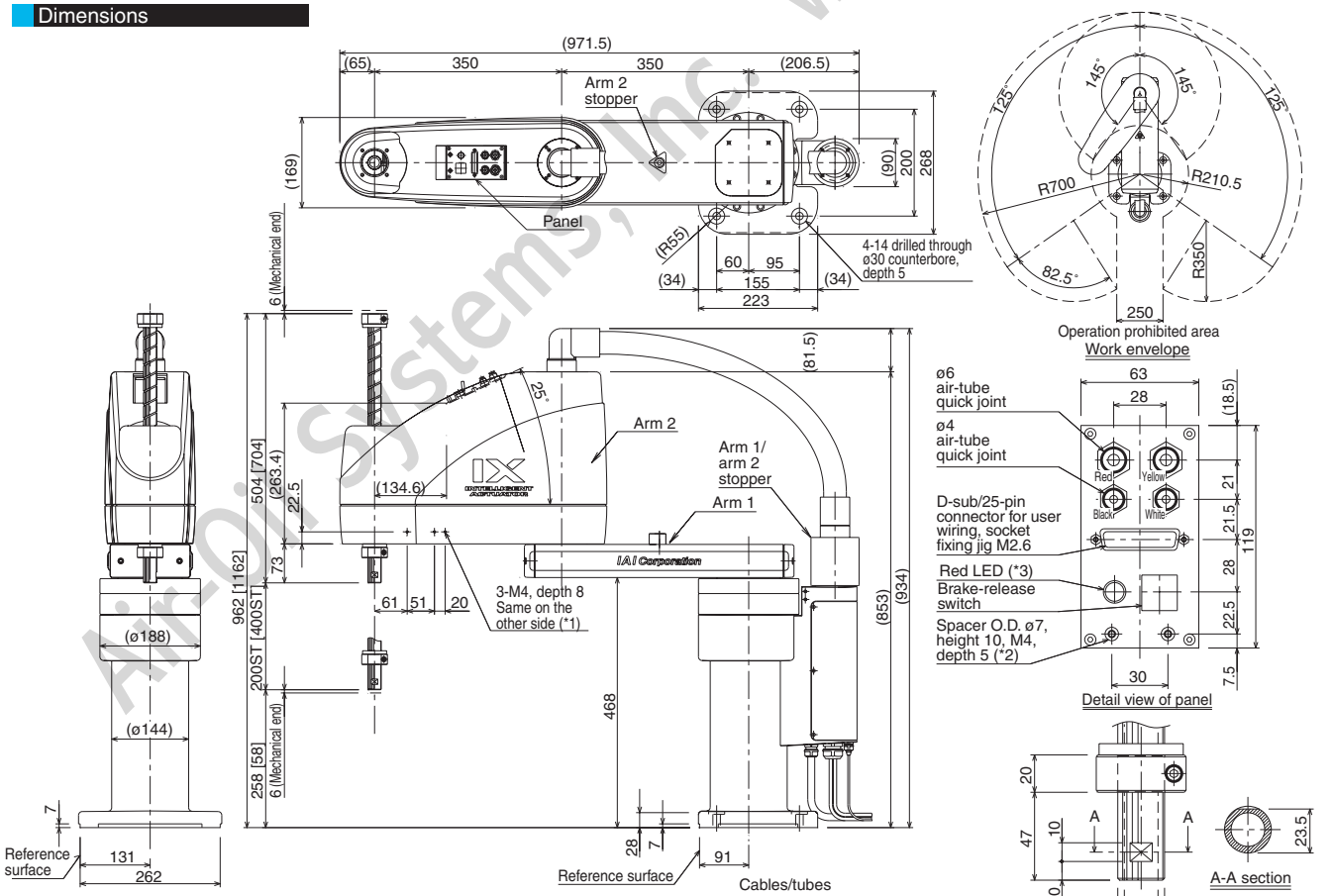

*1: The prepared hole 3-M4, depth 8 passes through the side panel of the arm.
*2: The external force applied to each spacer must not exceed 30 N in the axial direction or 2 N•m in the rotating direction.
*3: To use the LED, the user must provide a circuit that takes signals from the controller's I/O output and supplies 24 VDC to the applicable LED terminal in the user connector.

Cables/tubes
- Motor/encoder cable 5m/10m
- Brake power cable 5m/10m
- User cable 5m/10m
- Air tube (4 pcs) 0.15m

Applicable Controller Specifications

Applicable controller	Features	Maximum I/O points (inputs/outputs)	Serial communication unit	Power-supply voltage	Page
XSEL-KX	General-purpose type offering excellent expandability	176/160 points	Can be installed.	AC200V	P37

Caution Refer to P. 6 for the explanations of (Note 1) to (Note 8).

IX-NNN80□□

IX Medium SCARA Robot Standard Type:
Arm Length 800mm, Vertical (Z) Axis 200mm (400mm)

Type	Arm length	Load capacity
Standard type	800mm	5kg rated/20kg maximum

■ Model items

	Series	Model	Cable length	Controller type	Standard I/O	Expansion I/O	I/O cable length	Power-supply voltage
(Example)	IX	NNN8020	5L	KX	N1	EEE	2	2

* Refer to P. 10 for details on the model items.

* The above model code represents a combination of robot and controller.

Model/Specifications

Model	Axis configuration		Arm length (mm)	Motor capacity (W)	Work envelope	Positioning repeatability (mm) (Note 1)	Maximum operating speed (Note 2)	Standard cycle time (sec) (Note 3)	Load capacity (kg)		Axis 3 push force (N)		Axis 4 allowable load	
									Rated	Maximum	Push action (Note 4)	Maximum thrust (Note 4)	Allowable inertial moment (kg•m²) (Note 5)	Allowable torque (N•m)
IX–NNN8020–5L–KX–□–□–□–2 [IX–NNN8040–5L–KX–□–□–□–2]	Axis 1	Arm 1	450	750	±125°	±0.015	7121mm/s (Composite speed)	0.52	5	20	188	265	0.1	6.7
	Axis 2	Arm 2	350	400	±145°									
	Axis 3	Vertical axis	—	400	200mm [400mm]	±0.010	1583mm/s							
	Axis 4	Rotating axis	—	200	±360°	±0.005	1200°/s							

* In the above model code, specify the desired controller in □. For details, refer to "Explanation of SCARA Robot Model Items" (P. 10).

Common Specifications

Encode type	Absolute
User wiring	25-conductor AWG26 D-sub/25-pin connector with shield (socket)
User tubing	Air tube (O.D. ø6, I.D. ø4) x 2 (Normal working pressure 0.8MPa) Air tube (O.D. ø4, I.D. ø2.5) x 2 (Normal working pressure 0.8MPa)
Alarm indicator (Note 6)	Red, small LED indicator x 1 (24 VDC must be supplied.)
Brake-release switch (Note 7)	Brake-release switch to prevent the vertical axis from dropping (24 VDC must be supplied.)

Ambient temperature/humidity	Temperature: 0~40°C, humidity: 20~85%RH or below (non-condensing)
Robot weight	60kg
Cable length (Note 8)	5L: 5m (standard), 10L: 10m (optional)

Dimensions

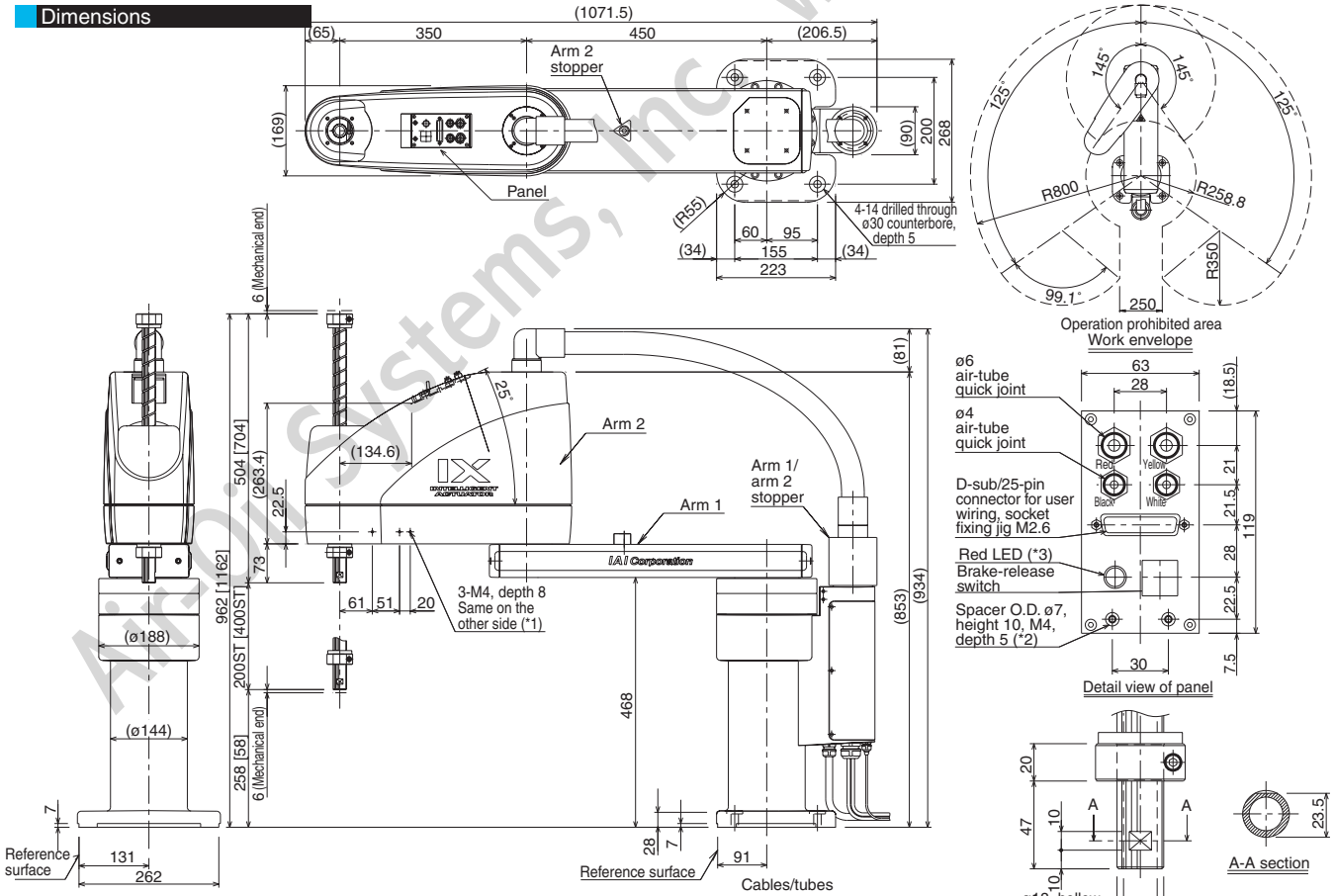

*1: The prepared hole 3-M4, depth 8 passes through the side panel of the arm.
*2: The external force applied to each spacer must not exceed 30 N in the axial direction or 2 N•m in the rotating direction.
*3: To use the LED, the user must provide a circuit that takes signals from the controller's I/O output and supplies 24 VDC to the applicable LED terminal in the user connector.

Cables/tubes
- Motor/encoder cable 5m/10m
- Brake power cable 5m/10m
- User cable 5m/10m
- Air tube (4 pcs) 0.15m

Applicable Controller Specifications

Applicable controller	Features	Maximum I/O points (inputs/outputs)	Serial communication unit	Power-supply voltage	Page
XSEL-KX	General-purpose type offering excellent expandability	176/160 points	Can be installed.	AC200V	P37

Caution Refer to P. 6 for the explanations of (Note 1) to (Note 8).

IX-NSN5016

IX Medium SCARA Robot High-speed Type:
Arm Length 500mm, Vertical (Z) Axis 160mm

Type / High-speed type | Arm length / 500mm | Load capacity / 1kg rated/3kg maximum

■ Model items

	Series	Model	Cable length	Controller type	Standard I/O	Expansion I/O	I/O cable length	Power-supply voltage
(Example)	IX	NSN5016	5L	KX	N1	EEE	2	2

* Refer to P. 10 for details on the model items.
* The above model code represents a combination of robot and controller.

Model/Specifications

Model	Axis configuration		Arm length (mm)	Motor capacity (W)	Work envelope	Positioning repeatability (mm) (Note 1)	Maximum operating speed (Note 2)	Standard cycle time (sec) (Note 3)	Load capacity (kg)		Axis 3 push force (N)		Axis 4 allowable load	
									Rated	Maximum	Push action (Note 4)	Maximum thrust (Note 4)	Allowable inertial moment (kg•m²) (Note 5)	Allowable torque (N•m)
IX–NSN5016–5L–KX–□–□–□–2	Axis 1	Arm 1	250	750	±120°	±0.010	4712mm/s (Composite speed)	0.29 to 0.30	1	3	135	190	0.015	2.2
	Axis 2	Arm 2	250	600	±145°									
	Axis 3	Vertical axis	—	200	160mm	±0.010	1085mm/s							
	Axis 4	Rotating axis	—	100	±360°	±0.010	1800°/s							

* In the above model code, specify the desired controller in □. For details, refer to "Explanation of SCARA Robot Model Items" (P. 10).

Common Specifications

Encode type	Absolute
User wiring	25-conductor AWG26 D-sub/25-pin connector with shield (socket)
User tubing	Air tube (O.D. ø6, I.D. ø4) x 2 (Normal working pressure 0.8MPa) Air tube (O.D. ø4, I.D. ø2.5) x 2 (Normal working pressure 0.8MPa)
Alarm indicator (Note 6)	Red, small LED indicator x 1 (24 VDC must be supplied.)
Brake-release switch (Note 7)	Brake-release switch to prevent the vertical axis from dropping (24 VDC must be supplied.)

Ambient temperature/humidity	Temperature: 0~40°C, humidity: 20~85%RH or below (non-condensing)
Robot weight	32kg
Cable length (Note 8)	5L: 5m (standard), 10L: 10m (optional)

Dimensions

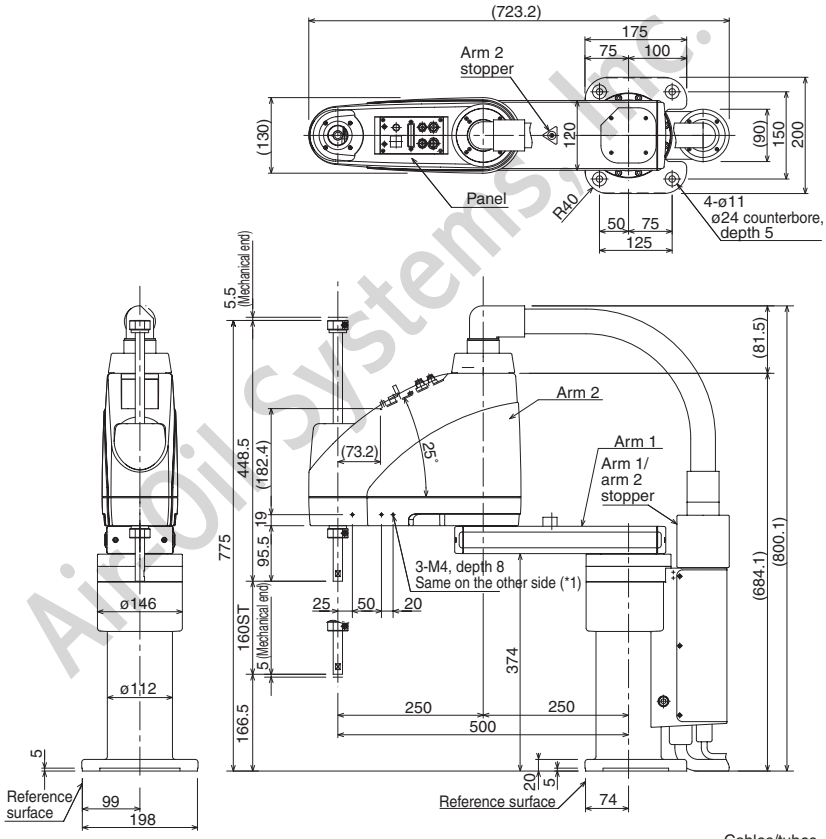

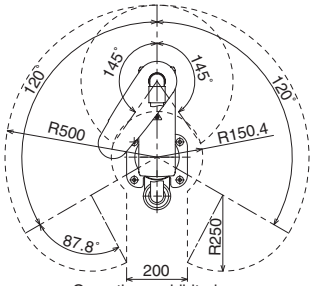

Operation prohibited area

Work envelope

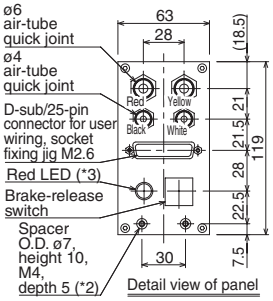

Detail view of panel

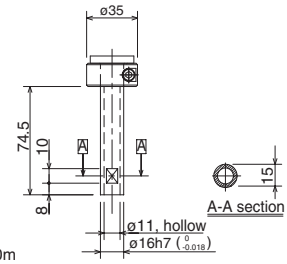

Detail view of tip

*1: The prepared hole 3-M4, depth 8 passes through the side panel of the arm.
A long mounting screw will contact the mechanical parts inside the arm, so exercise caution.
*2: The external force applied to each spacer must not exceed 30 N in the axial direction or 2 N•m in the rotating direction.
*3: To use the LED, the user must provide a circuit that takes signals from the controller's I/O output and supplies 24 VDC to the applicable LED terminal in the user connector.

Cables/tubes
- Motor/encoder cable 5m/10m
- Brake power cable 5m/10m
- User cable 5m/10m
- Air tube (4 pcs) 0.15m

Applicable Controller Specifications

Applicable controller	Features	Maximum I/O points (inputs/outputs)	Serial communication unit	Power-supply voltage	Page
XSEL-KX	General-purpose type offering excellent expandability	176/160 points	Can be installed.	AC200V	P37

Caution Refer to P. 6 for the explanations of (Note 1) to (Note 8).

IX-NSN6016

IX Medium SCARA Robot High-speed Type:
Arm Length 600mm, Vertical (Z) Axis 160mm

Type / High-speed type | Arm length / 600mm | Load capacity / 1kg rated/3kg maximum

■ Model items

	Series	Model	Cable length	Controller type	Standard I/O	Expansion I/O	I/O cable length	Power-supply voltage
(Example)	IX	NSN6016	5L	KX	N1	EEE	2	2

* Refer to P. 10 for details on the model items.
* The above model code represents a combination of robot and controller.

Model/Specifications

Model	Axis configuration		Arm length (mm)	Motor capacity (W)	Work envelope	Positioning repeatability (mm) (Note 1)	Maximum operating speed (Note 2)	Standard cycle time (sec) (Note 3)	Load capacity (kg)		Axis 3 push force (N)		Axis 4 allowable load	
									Rated	Maximum	Push action (Note 4)	Maximum thrust (Note 4)	Allowable inertial moment (kg•m²) (Note 5)	Allowable torque (N•m)
IX–NSN6016–5L–KX–□–□–□–2	Axis 1	Arm 1	350	750	±120°	±0.010	5236mm/s (Composite speed)	0.38 to 0.39	1	3	135	190	0.015	2.2
	Axis 2	Arm 2	250	600	±145°									
	Axis 3	Vertical axis	—	200	160mm	±0.010	1085mm/s							
	Axis 4	Rotating axis	—	100	±360°	±0.010	1800°/s							

* In the above model code, specify the desired controller in □. For details, refer to "Explanation of SCARA Robot Model Items" (P. 10).

Common Specifications

Encode type	Absolute
User wiring	25-conductor AWG26 D-sub/25-pin connector with shield (socket)
User tubing	Air tube (O.D. ø6, I.D. ø4) x 2 (Normal working pressure 0.8MPa) Air tube (O.D. ø4, I.D. ø2.5) x 2 (Normal working pressure 0.8MPa)
Alarm indicator (Note 6)	Red, small LED indicator x 1 (24 VDC must be supplied.)
Brake-release switch (Note 7)	Brake-release switch to prevent the vertical axis from dropping (24 VDC must be supplied.)

Ambient temperature/humidity	Temperature: 0~40°C, humidity: 20~85%RH or below (non-condensing)
Robot weight	33kg
Cable length (Note 8)	5L: 5m (standard), 10L: 10m (optional)

Dimensions

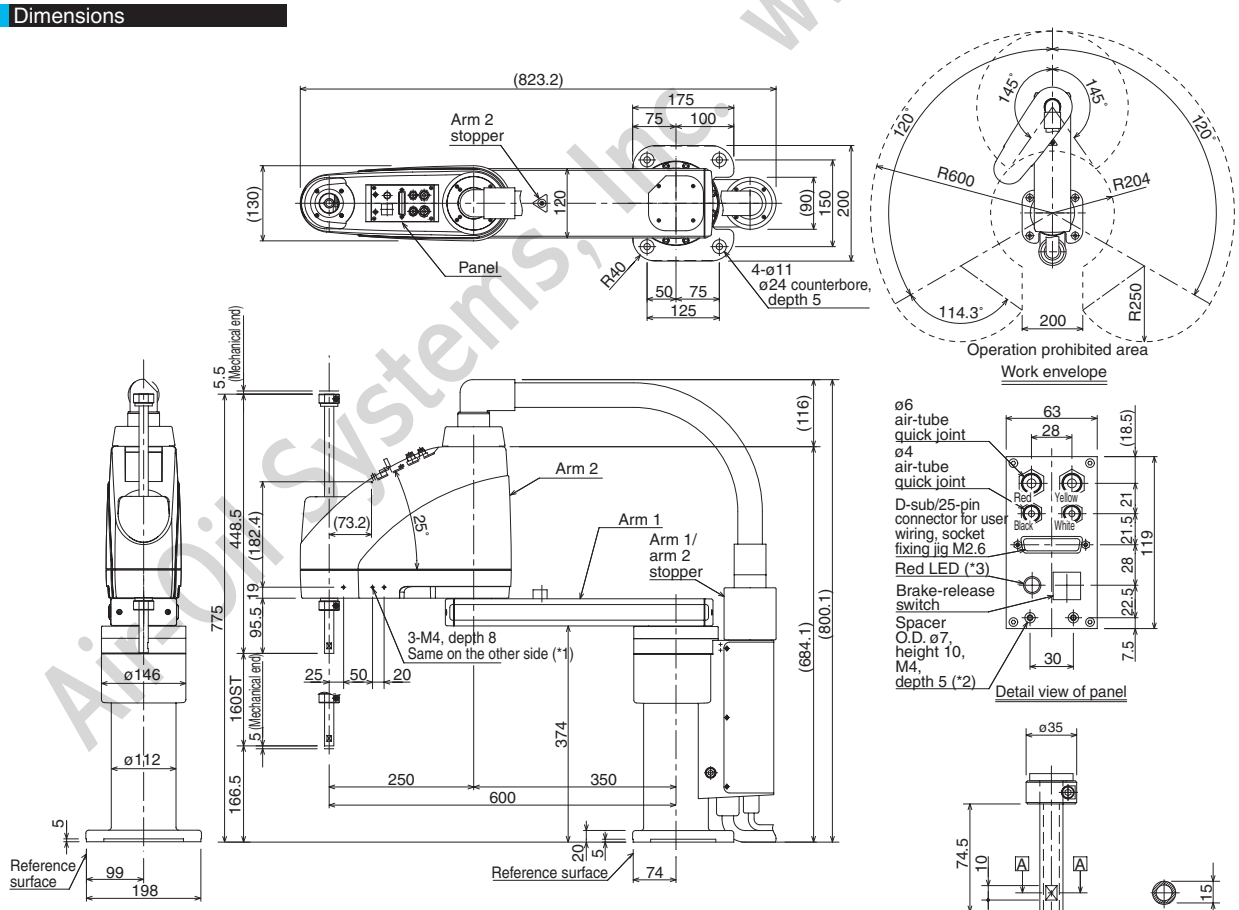

*1: The prepared hole 3-M4, depth 8 passes through the side panel of the arm.
A long mounting screw will contact the mechanical parts inside the arm, so exercise caution.
*2: The external force applied to each spacer must not exceed 30 N in the axial direction or 2 N•m in the rotating direction.
*3: To use the LED, the user must provide a circuit that takes signals from the controller's I/O output and supplies 24 VDC to the applicable LED terminal in the user connector.

Cables/tubes
- Motor/encoder cable 5m/10m
- Brake power cable 5m/10m
- User cable 5m/10m
- Air tube (4 pcs) 0.15m

Applicable Controller Specifications

Applicable controller	Features	Maximum I/O points (inputs/outputs)	Serial communication unit	Power-supply voltage	Page
XSEL-KX	General-purpose type offering excellent expandability	176/160 points	Can be installed.	AC200V	P37

Caution Refer to P. 6 for the explanations of (Note 1) to (Note 8).

IX-NNW2515

Small SCARA Robot Dustproof/splash-proof type:
Arm Length 250mm, Vertical (Z) Axis 150mm

Type / Dustproof/splash-proof type | Arm length / 250mm | Load capacity / 1kg rated/3kg maximum

■ Model items

	Series	Model	Cable length	Controller type	Standard I/O	Expansion I/O	I/O cable length	Power-supply voltage
(Example)	IX	NNW2515	5L	KX	N1	EEE	2	2

* Refer to P. 10 for details on the model items.
* The above model code represents a combination of robot and controller.

Model/Specifications

Model	Axis configuration		Arm length (mm)	Motor capacity (W)	Work envelope	Positioning repeatability (mm) (Note 1)	Maximum operating speed (Note 2)	Standard cycle time (sec) (Note 3)	Load capacity (kg)		Axis 3 push force (N)		Axis 4 allowable load	
									Rated	Maximum	Push action (Note 4)	Maximum thrust (Note 4)	Allowable inertial moment (kg•m²) (Note 5)	Allowable torque (N•m)
IX–NNW2515–5L–□–□–□–□–2	Axis 1	Arm 1	125	200	±120°	±0.010	3142mm/s (Composite speed)	0.51	1	3	65.3	90.9	0.015	1.9
	Axis 2	Arm 2	125	100	±120°									
	Axis 3	Vertical axis	—	100	150mm	±0.010	1106mm/s							
	Axis 4	Rotating axis	—	50	±360°	±0.005	1600°/s							

* In the above model code, specify the desired controller in □. For details, refer to "Explanation of SCARA Robot Model Items" (P. 10).

Common Specifications

Encode type	Absolute
User wiring	15-conductor AWG26 waterproof connector with shield
User tubing	Air tube (O.D. ø4, I.D. ø2.5) x 3 (Normal working pressure 0.8MPa)
Alarm indicator (Note 6)	Red, small LED indicator x 1 (24 VDC must be supplied.)
Brake-release switch (Note 7)	Brake-release switch to prevent the vertical axis from dropping (24 VDC must be supplied.)

Ambient temperature/humidity	Temperature: 0~40°C, humidity: 20~85%RH or below (non-condensing)
Robot weight	21kg
Cable length (Note 8)	5L: 5m (standard), 10L: 10m (optional)
Protection grade (Note 9)	IP65 or equivalent
Air purge pressure (Note 10)	0.3MPa or above (0.6MPa maximum) (Clean, dry air)

Dimensions

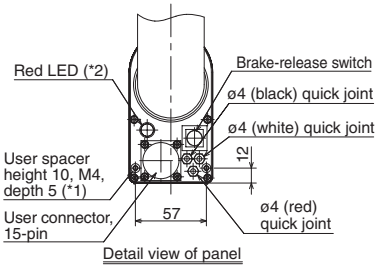

Detail view of panel

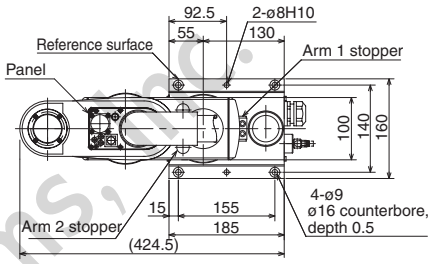

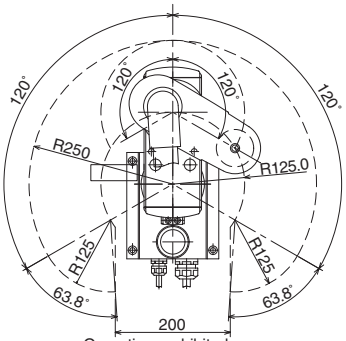

Work envelope

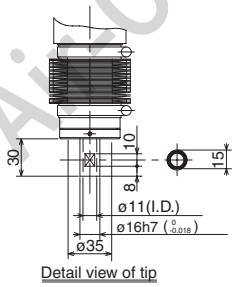

Detail view of tip

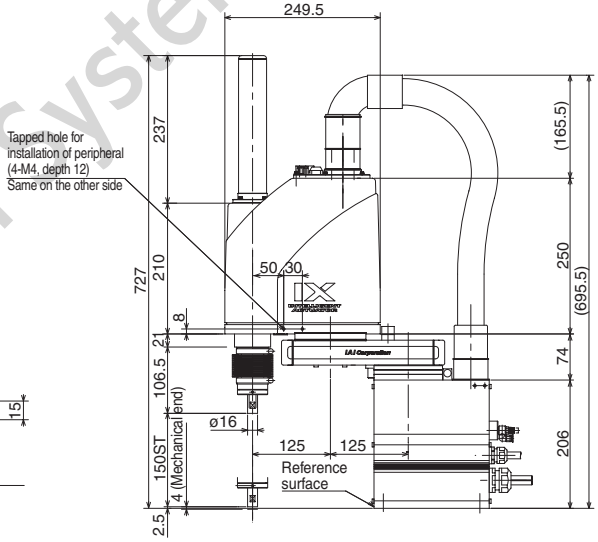

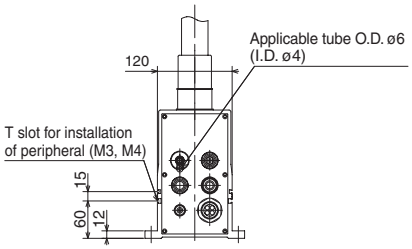

Cables/tubes
- Motor/encoder cable 5m/10m
- Brake power cable 5m/10m
- User cable 5m/10m
- Air tube (4 pcs) 0.15m

*1: The external force applied to each spacer must not exceed 30 N in the axial direction or 2 N•m in the rotating direction.
*2: To use the LED, the user must provide a circuit that takes signals from the controller's I/O output and supplies 24 VDC to the applicable LED terminal in the user connector.

Applicable Controller Specifications

Applicable controller	Features	Maximum I/O points (inputs/outputs)	Serial communication unit	Power-supply voltage	Page
XSEL-KX	General-purpose type offering excellent expandability	176/160 points	Can be installed.	AC200V	P37
XSEL-JX	Compact, space-saving type	80/64 points	Cannot be installed.		P37

Caution Refer to P. 6 for the explanations of (Note 1) to (Note 8).

IX-NNW3515

Small SCARA Robot Dustproof/splash-proof type:
Arm Length 350mm, Vertical (Z) Axis 150mm

Type	Arm length	Load capacity
Dustproof/splash-proof type	350mm	1kg rated/3kg maximum

■ Model items

	Series	Model	Cable length	Controller type	Standard I/O	Expansion I/O	I/O cable length	Power-supply voltage
(Example)	IX	NNW3515	5L	KX	N1	EEE	2	2

* Refer to P. 10 for details on the model items.
* The above model code represents a combination of robot and controller.

Model/Specifications

Model	Axis configuration		Arm length (mm)	Motor capacity (W)	Work envelope	Positioning repeatability (mm) (Note 1)	Maximum operating speed (Note 2)	Standard cycle time (sec) (Note 3)	Load capacity (kg)		Axis 3 push force (N)		Axis 4 allowable load	
									Rated	Maximum	Push action (Note 4)	Maximum thrust (Note 4)	Allowable inertial moment (kg•m²) (Note 5)	Allowable torque (N•m)
IX–NNW3515–5L–□–□–□–□–2	Axis 1	Arm 1	225	200	±120°	±0.010	3979mm/s (Composite speed)	0.59	1	3	65.3	90.9	0.015	1.9
	Axis 2	Arm 2	125	100	±135°									
	Axis 3	Vertical axis	—	100	150mm	±0.010	1106mm/s							
	Axis 4	Rotating axis	—	50	±360°	±0.005	1600°/s							

* In the above model code, specify the desired controller in □. For details, refer to "Explanation of SCARA Robot Model Items" (P. 10).

Common Specifications

Encode type	Absolute
User wiring	15-conductor AWG26 waterproof connector with shield
User tubing	Air tube (O.D. ø4, I.D. ø2.5) x 3 (Normal working pressure 0.8MPa)
Alarm indicator (Note 6)	Red, small LED indicator x 1 (24 VDC must be supplied.)
Brake-release switch (Note 7)	Brake-release switch to prevent the vertical axis from dropping (24 VDC must be supplied.)

Ambient temperature/humidity	Temperature: 0~40°C, humidity: 20~85%RH or below (non-condensing)
Robot weight	22kg
Cable length (Note 8)	5L: 5m (standard), 10L: 10m (optional)
Protection grade (Note 9)	IP65 or equivalent
Air purge pressure (Note 10)	0.3MPa or above (0.6MPa maximum) (Clean, dry air)

Dimensions

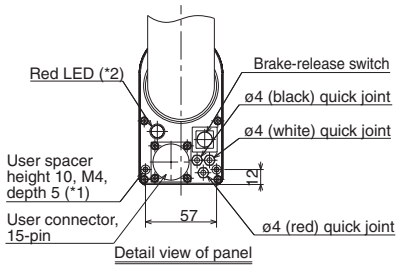

Detail view of panel

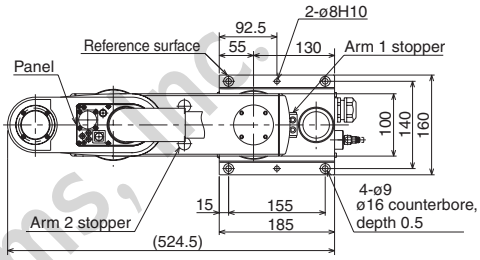

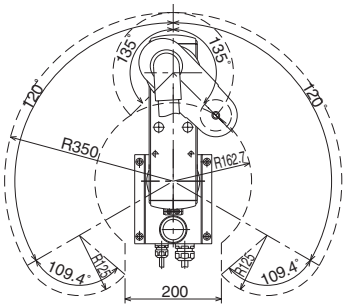

Operation prohibited area

Work envelope

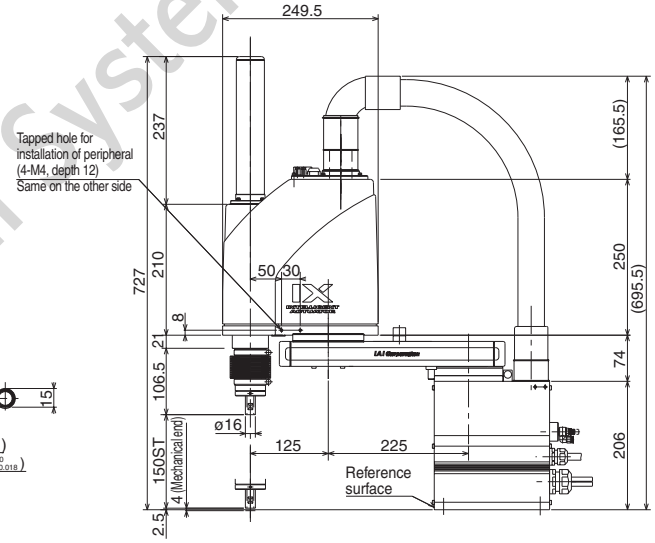

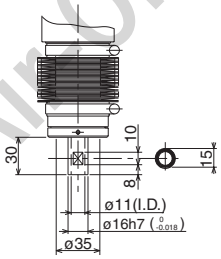

Detail view of tip

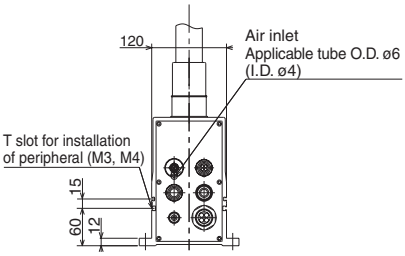

Cables/tubes
- Motor/encoder cable 5m/10m
- Brake power cable 5m/10m
- User cable 5m/10m
- Air tube (3 pcs) 0.15m

*1: The external force applied to each spacer must not exceed 30 N in the axial direction or 2 N•m in the rotating direction.
*2: To use the LED, the user must provide a circuit that takes signals from the controller's I/O output and supplies 24 VDC to the applicable LED terminal in the user connector.

Applicable Controller Specifications

Applicable controller	Features	Maximum I/O points (inputs/outputs)	Serial communication unit	Power-supply voltage	Page
XSEL-KX	General-purpose type offering excellent expandability	176/160 points	Can be installed.	AC200V	P37
XSEL-JX	Compact, space-saving type	80/64 points	Cannot be installed.		P37

Caution Refer to P. 6 for the explanations of (Note 1) to (Note 8).

IX-NNW50□□

IX Medium SCARA Robot Dustproof/splash-proof type:
Arm Length 500mm, Vertical (Z) Axis 200mm (300mm)

Type / Dustproof/splash-proof type | Arm length / 500mm | Load capacity / 2kg rated/10kg maximum

■ Model items

Series	Model	Cable length	Controller type	Standard I/O	Expansion I/O	I/O cable length	Power-supply voltage
(Example) IX	–NNW5020	– 5L	– KX	– N1	– EEE	– 2	– 2

* Refer to P. 10 for details on the model items.
* The above model code represents a combination of robot and controller.

Model/Specifications

Model	Axis configuration		Arm length (mm)	Motor capacity (W)	Work envelope	Positioning repeatability (mm) (Note 1)	Maximum operating speed (Note 2)	Standard cycle time (sec) (Note 3)	Load capacity (kg)		Axis 3 push force (N)		Axis 4 allowable load	
									Rated	Maximum	Push action (Note 4)	Maximum thrust (Note 4)	Allowable inertial moment (kg•m²) (Note 5)	Allowable torque (N•m)
IX–NNW5020–5L–KX–□–□–□–2 [IX–NNW5030–5L–KX–□–□–□–2]	Axis 1	Arm 1	250	400	±120°	±0.010	6283mm/s (Composite speed)	0.49	2	10	108	152	0.06	3.3
	Axis 2	Arm 2	250	200	±145°									
	Axis 3	Vertical axis	—	200	200mm [300mm]	±0.010	1393mm/s							
	Axis 4	Rotating axis	—	100	±360°	±0.005	1200°/s							

* In the above model code, specify the desired controller in □. For details, refer to "Explanation of SCARA Robot Model Items" (P. 10).

Common Specifications

Encode type	Absolute
User wiring	23-conductor AWG26 waterproof connector with shield
User tubing	Air tube (O.D. ø6, I.D. ø4) x 2 (Normal working pressure 0.8MPa) Air tube (O.D. ø4, I.D. ø2.5) x 2 (Normal working pressure 0.8MPa)
Alarm indicator (Note 6)	Red, small LED indicator x 1 (24 VDC must be supplied.)
Brake-release switch (Note 7)	Brake-release switch to prevent the vertical axis from dropping (24 VDC must be supplied.)

Ambient temperature/humidity	Temperature: 0~40°C, humidity: 20~85%RH or below (non-condensing)
Robot weight	32.5kg
Cable length (Note 8)	5L: 5m (standard), 10L: 10m (optional)
Protection grade (Note 9)	IP65 or equivalent
Air purge pressure (Note 10)	0.3MPa or above (0.6MPa maximum) (Clean, dry air)

Dimensions

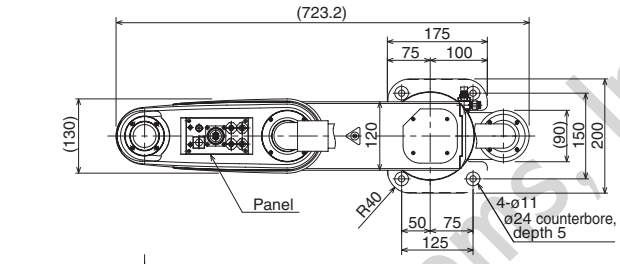

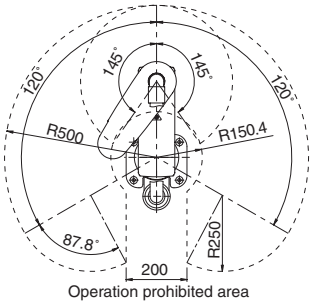

Operation prohibited area

Work envelope

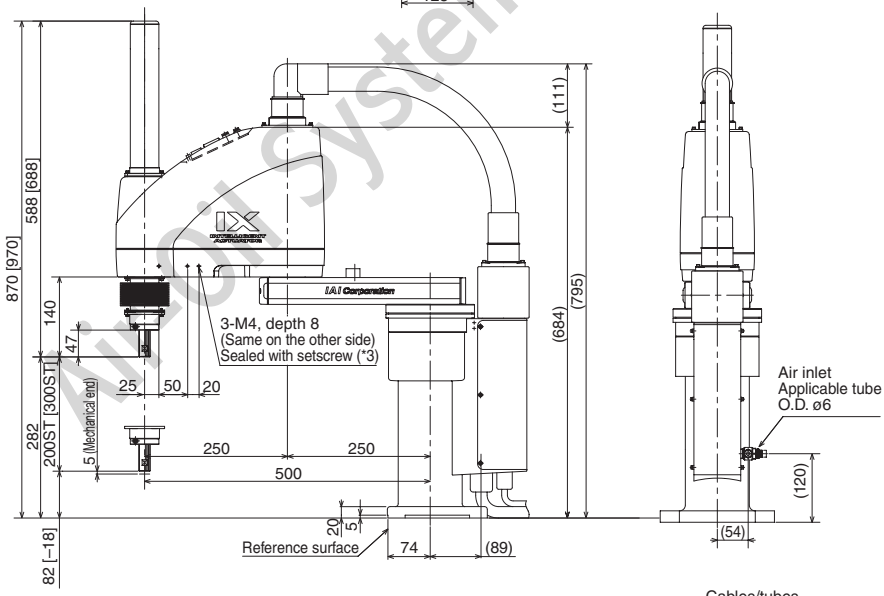

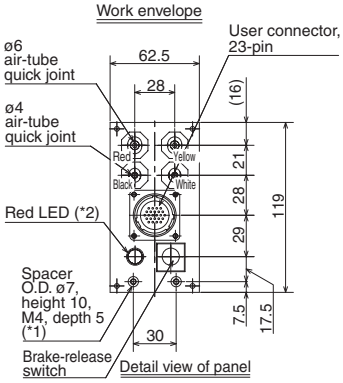

Detail view of panel

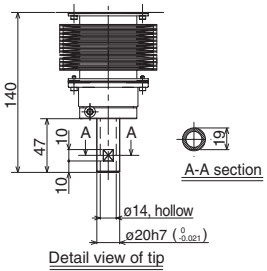

A-A section

Detail view of tip

*1: The external force applied to each spacer must not exceed 30 N in the axial direction or 2 N•m in the rotating direction.
*2: To use the LED, the user must provide a circuit that takes signals from the controller's I/O output and supplies 24 VDC to the applicable LED terminal in the user connector.
*3: The prepared hole 3-M4, depth 8 passes through the side panel of the arm. A long mounting screw will contact the mechanical parts inside the arm, so exercise caution. Be sure to seal the screw by attaching sealing tape, etc.

Cables/tubes
- Motor/encoder cable 5m/10m
- Brake power cable 5m/10m
- User cable 5m/10m
- Air tube (4 pcs) 0.15m

Applicable Controller Specifications

Applicable controller	Features	Maximum I/O points (inputs/outputs)	Serial communication unit	Power-supply voltage	Page
XSEL-KX	General-purpose type offering excellent expandability	176/160 points	Can be installed.	AC200V	P37

Caution Refer to P. 6 for the explanations of (Note 1) to (Note 10).

IX-NNW60□□

IX Medium SCARA Robot Dustproof/splash-proof type:
Arm Length 600mm, Vertical (Z) Axis 200mm (300mm)

Type / Dustproof/splash-proof type | Arm length / 600mm | Load capacity / 2kg rated/10kg maximum

■ Model items

	Series	Model	Cable length	Controller type	Standard I/O	Expansion I/O	I/O cable length	Power-supply voltage
(Example)	IX	NNW6020	5L	KX	N1	EEE	2	2

* Refer to P. 10 for details on the model items.
* The above model code represents a combination of robot and controller.

Model/Specifications

Model	Axis configuration		Arm length (mm)	Motor capacity (W)	Work envelope	Positioning repeatability (mm) (Note 1)	Maximum operating speed (Note 2)	Standard cycle time (sec) (Note 3)	Load capacity (kg)		Axis 3 push force (N)		Axis 4 allowable load	
									Rated	Maximum	Push action (Note 4)	Maximum thrust (Note 4)	Allowable inertial moment (kg•m²) (Note 5)	Allowable torque (N•m)
IX–NNW6020–5L–KX–□–□–□–2 [IX–NNW6030–5L–KX–□–□–□–2]	Axis 1	Arm 1	350	400	±120°	±0.010	7121mm/s (Composite speed)	0.55	2	10	108	152	0.06	3.3
	Axis 2	Arm 2	250	200	±145°									
	Axis 3	Vertical axis	—	200	200mm [300mm]	±0.010	1393mm/s							
	Axis 4	Rotating axis	—	100	±360°	±0.005	1200°/s							

* In the above model code, specify the desired controller in □. For details, refer to "Explanation of SCARA Robot Model Items" (P. 10).

Common Specifications

Encode type	Absolute
User wiring	23-conductor AWG26 waterproof connector with shield
User tubing	Air tube (O.D. ø6, I.D. ø4) x 2 (Normal working pressure 0.8MPa) Air tube (O.D. ø4, I.D. ø2.5) x 2 (Normal working pressure 0.8MPa)
Alarm indicator (Note 6)	Red, small LED indicator x 1 (24 VDC must be supplied.)
Brake-release switch (Note 7)	Brake-release switch to prevent the vertical axis from dropping (24 VDC must be supplied.)

Ambient temperature/humidity	Temperature: 0~40°C, humidity: 20~85%RH or below (non-condensing)
Robot weight	34.5kg
Cable length (Note 8)	5L: 5m (standard), 10L: 10m (optional)
Protection grade (Note 9)	IP65 or equivalent
Air purge pressure (Note 10)	0.3MPa or above (0.6MPa maximum) (Clean, dry air)

Dimensions

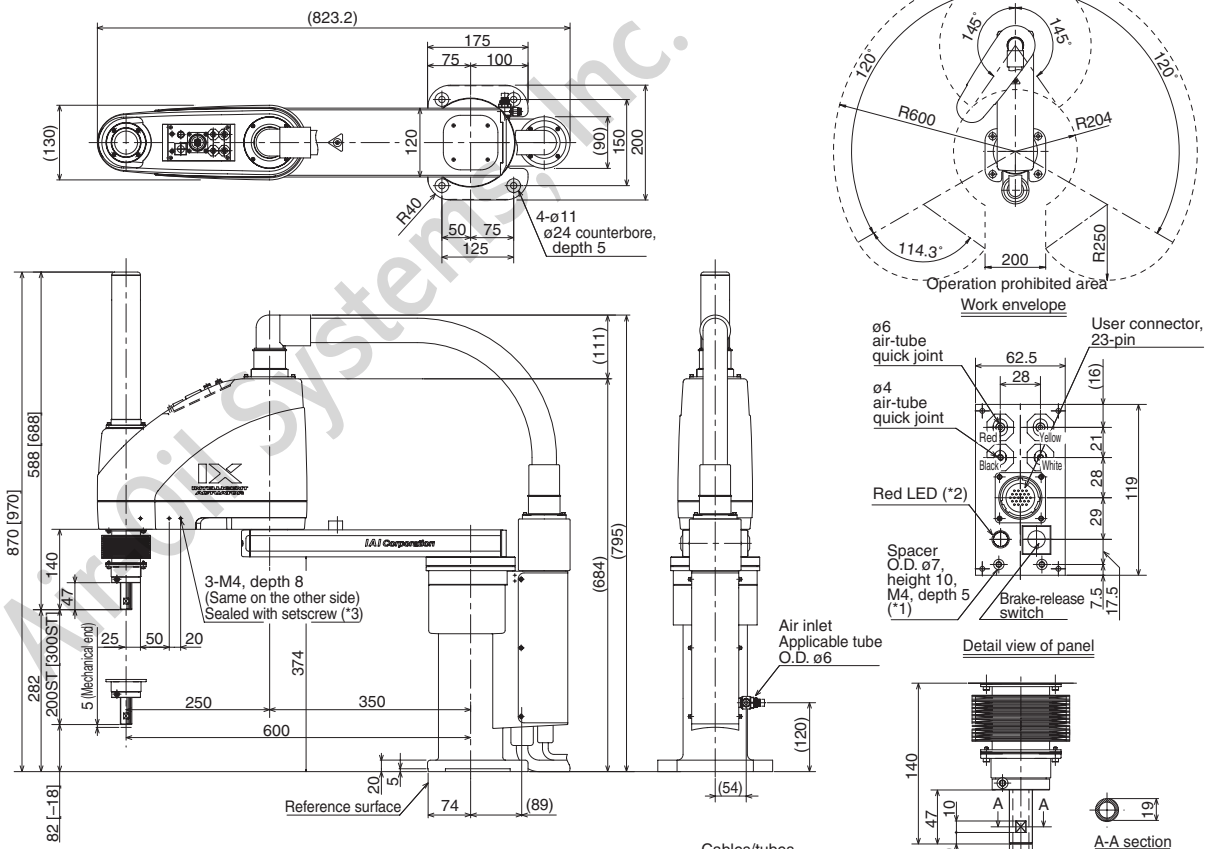

*1: The external force applied to each spacer must not exceed 30 N in the axial direction or 2 N•m in the rotating direction.
*2: To use the LED, the user must provide a circuit that takes signals from the controller's I/O output and supplies 24 VDC to the applicable LED terminal in the user connector.
*3: The prepared hole 3-M4, depth 8 passes through the side panel of the arm. A long mounting screw will contact the mechanical parts inside the arm, so exercise caution. Be sure to seal the screw by attaching sealing tape, etc.

Cables/tubes
- Motor/encoder cable 5m/10m
- Brake power cable 5m/10m
- User cable 5m/10m
- Air tube (4 pcs) 0.15m

Applicable Controller Specifications

Applicable controller	Features	Maximum I/O points (inputs/outputs)	Serial communication unit	Power-supply voltage	Page
XSEL-KX	General-purpose type offering excellent expandability	176/160 points	Can be installed.	AC200V	P37

Caution Refer to P. 6 for the explanations of (Note 1) to (Note 10).

IX-NNW70□□

IX Large SCARA Robot Dustproof/splash-proof type:
Arm Length 700mm, Vertical (Z) Axis 200mm (400mm)

Type / Dustproof/splash-proof type | Arm length / 700mm | Load capacity / 5kg rated/20kg maximum

■ Model items

Series	Model	Cable length	Controller type	Standard I/O	Expansion I/O	I/O cable length	Power-supply voltage
(Example) IX	NNW7020	5L	KX	N	EEE	2	2

* Refer to P. 10 for details on the model items.
* The above model code represents a combination of robot and controller.

Model/Specifications

Model	Axis configuration		Arm length (mm)	Motor capacity (W)	Work envelope	Positioning repeatability (mm) (Note 1)	Maximum operating speed (Note 2)	Standard cycle time (sec) (Note 3)	Load capacity (kg)		Axis 3 push force (N)		Axis 4 allowable load	
									Rated	Maximum	Push action (Note 4)	Maximum thrust (Note 4)	Allowable inertial moment (kg•m²) (Note 5)	Allowable torque (N•m)
IX–NNW7020–5L–KX–□–□–□–2 [IX–NNW7040–5L–KX–□–□–□–2]	Axis 1	Arm 1	350	750	±125°	±0.015 (XY)	6597mm/s (Composite speed)	0.52	5	20	188	265	0.1	6.7
	Axis 2	Arm 2	350	400	±145°									
	Axis 3	Vertical axis	—	400	200mm [400mm]	±0.010	1583mm/s							
	Axis 4	Rotating axis	—	200	±360°	±0.005	1200°/s							

* In the above model code, specify the desired controller in □. For details, refer to "Explanation of SCARA Robot Model Items" (P. 10).

Common Specifications

Encode type	Absolute
User wiring	23-conductor AWG26 waterproof connector with shield
User tubing	Air tube (O.D. ø6, I.D. ø4) x 2 (Normal working pressure 0.8MPa) Air tube (O.D. ø4, I.D. ø2.5) x 2 (Normal working pressure 0.8MPa)
Alarm indicator (Note 6)	Red, small LED indicator x 1 (24 VDC must be supplied.)
Brake-release switch (Note 7)	Brake-release switch to prevent the vertical axis from dropping (24 VDC must be supplied.)

Ambient temperature/humidity	Temperature: 0~40°C, humidity: 20~85%RH or below (non-condensing)
Robot weight	60kg
Cable length (Note 8)	5L: 5m (standard), 10L: 10m (optional)
Protection grade (Note 9)	IP65 or equivalent
Air purge pressure (Note 10)	0.3MPa or above (0.6MPa maximum) (Clean, dry air)

Dimensions

* The value in square brackets applies when the vertical axis length is 400 mm (optional).

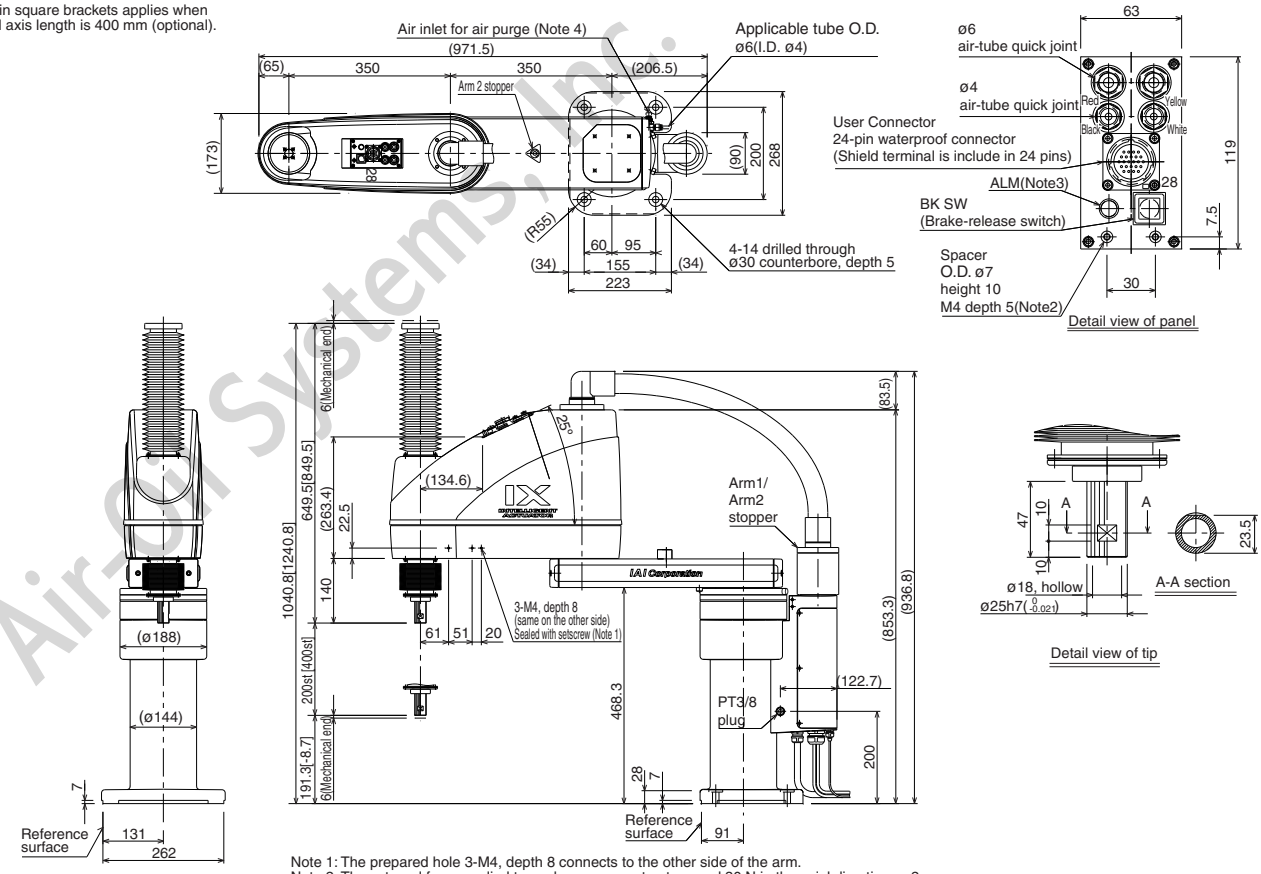

Note 1: The prepared hole 3-M4, depth 8 connects to the other side of the arm.
Note 2: The external force applied to each spacer must not exceed 30 N in the axial direction or 2 N•m in the rotating direction.
Note 3: To use the LED, the user must provide a circuit that takes signals from the controller's I/O output and supplies 24 VDC to the applicable LED terminal in the user connector.
Note 4: The air inlet can be installed in the reverse direction (by disconnecting the PT3/8 plug and swapping it with the joint).

Applicable Controller Specifications

Applicable controller	Features	Maximum I/O points (inputs/outputs)	Serial communication unit	Power-supply voltage	Page
XSEL-KX	General-purpose type offering excellent expandability	Up to 192 points	Can be installed.	AC200V	P37

Caution Refer to P. 6 for the explanations of (Note 1) to (Note 10).

IX-NNW80□□

IX Large SCARA Robot Dustproof/splash-proof type:
Arm Length 800mm, Vertical (Z) Axis 200mm (400mm)

Type / Dustproof/splash-proof type | Arm length / 800mm | Load capacity / 5kg rated/20kg maximum

■ Model items

Series	Model	Cable length	Controller type	Standard I/O	Expansion I/O	I/O cable length	Power-supply voltage
(Example) IX	NNW8020	5L	KX	N	EEE	2	2

* Refer to P. 10 for details on the model items.
* The above model code represents a combination of robot and controller.

Model/Specifications

Model	Axis configuration		Arm length (mm)	Motor capacity (W)	Work envelope	Positioning repeatability (mm) (Note 1)	Maximum operating speed (Note 2)	Standard cycle time (sec) (Note 3)	Load capacity (kg)		Axis 3 push force (N)		Axis 4 allowable load	
									Rated	Maximum	Push action (Note 4)	Maximum thrust (Note 4)	Allowable inertial moment (kg•m²) (Note 5)	Allowable torque (N•m)
IX–NNW8020–5L–KX–□–□–□–2 [IX–NNW8040–5L–KX–□–□–□–2]	Axis 1	Arm 1	450	750	±125°	±0.015 (XY)	7121mm/s (Composite speed)	0.52	5	20	188	265	0.1	6.7
	Axis 2	Arm 2	350	400	±145°									
	Axis 3	Vertical axis	—	400	200mm [400mm]	±0.010	1583mm/s							
	Axis 4	Rotating axis	—	200	±360°	±0.005	1200°/s							

* In the above model code, specify the desired controller in □. For details, refer to "Explanation of SCARA Robot Model Items" (P. 10).

Common Specifications

Encode type	Absolute
User wiring	23-conductor AWG26 waterproof connector with shield
User tubing	Air tube (O.D. ø6, I.D. ø4) x 2 (Normal working pressure 0.8MPa) Air tube (O.D. ø4, I.D. ø2.5) x 2 (Normal working pressure 0.8MPa)
Alarm indicator (Note 6)	Red, small LED indicator x 1 (24 VDC must be supplied.)
Brake-release switch (Note 7)	Brake-release switch to prevent the vertical axis from dropping (24 VDC must be supplied.)

Ambient temperature/humidity	Temperature: 0~40°C, humidity: 20~85%RH or below (non-condensing)
Robot weight	62kg
Cable length (Note 8)	5L: 5m (standard), 10L: 10m (optional)
Protection grade (Note 9)	IP65 or equivalent
Air purge pressure (Note 10)	0.3MPa or above (0.6MPa maximum) (Clean, dry air)

Dimensions

* The value in square brackets applies when the vertical axis length is 400 mm (optional).

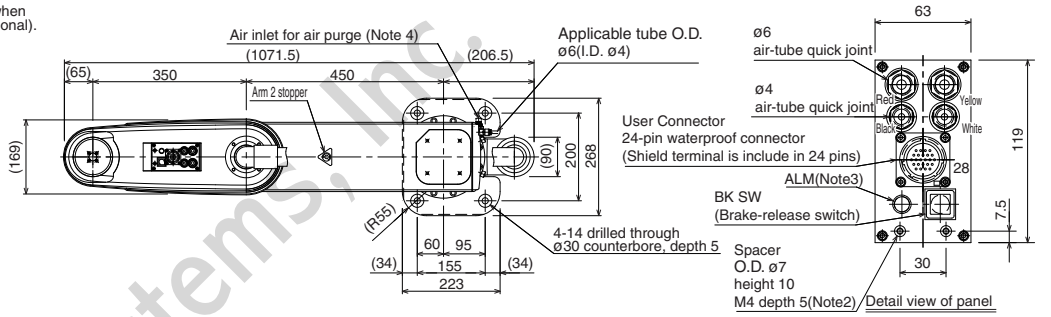

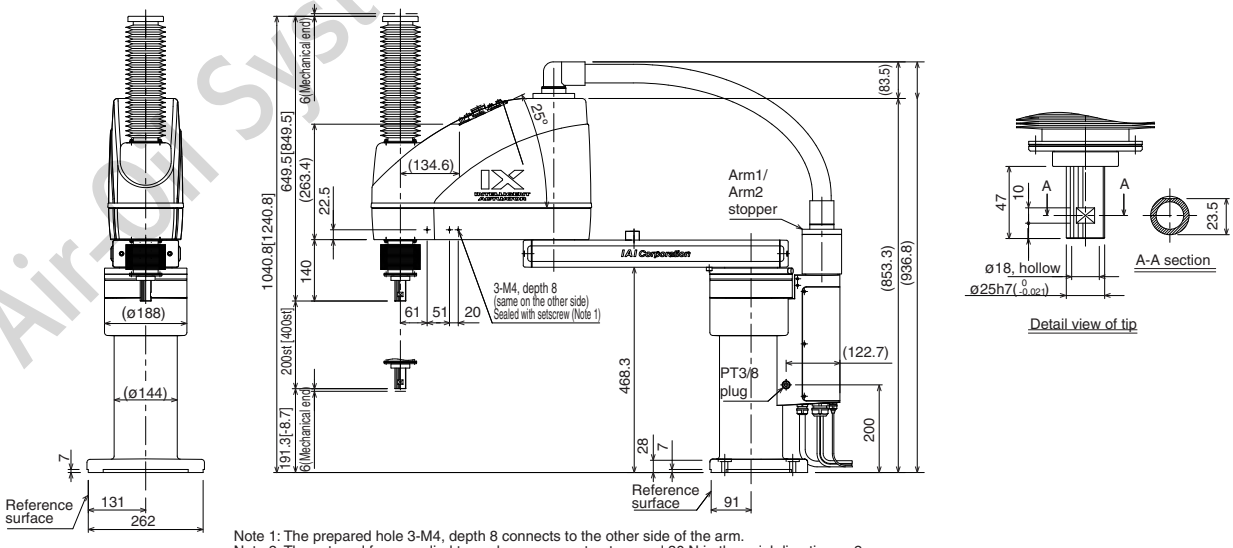

Note 1: The prepared hole 3-M4, depth 8 connects to the other side of the arm.
Note 2: The external force applied to each spacer must not exceed 30 N in the axial direction or 2 N0m in the rotating direction.
Note 3: To use the LED, the user must provide a circuit that takes signals from the controller's I/O output and supplies 24 VDC to the applicable LED terminal in the user connector.
Note 4: The air inlet can be installed in the reverse direction (by disconnecting the PT3/8 plug and swapping it with the joint).

Applicable Controller Specifications

Applicable controller	Features	Maximum I/O points (inputs/outputs)	Serial communication unit	Power-supply voltage	Page
XSEL-KX	General-purpose type offering excellent expandability	Up to 192 points	Can be installed.	AC200V	P37

Caution Refer to P. 6 for the explanations of (Note 1) to (Note 10).

IX-TNN3015 Small SCARA Robot Wall-Mount Type: Arm Length 300mm, Vertical (Z) Axis 150mm

IX-UNN3015 Small SCARA Robot Inverse Type: Arm Length 300mm, Vertical (Z) Axis 150mm

Type / Wall-mount/inverse type | Arm length / 300mm | Load capacity / 1kg rated/3kg maximum

■ Model items

	Series		Model		Cable length		Controller type		Standard I/O		Expansion I/O		I/O cable length		Power-supply voltage
(Example)	IX	–	TNN3015	–	5L	–	KX	–	N1	–	EEE	–	2	–	2

* Refer to P. 10 for details on the model items.

* The above model code represents a combination of robot and controller.

Model/Specifications

Model	Axis configuration		Arm length (mm)	Motor capacity (W)	Work envelope	Positioning repeatability (mm) (Note 1)	Maximum operating speed (Note 2)	Standard cycle time (sec) (Note 3)	Load capacity (kg)		Axis 3 push force (N)		Axis 4 allowable load	
									Rated	Maximum	Push action (Note 4)	Maximum thrust (Note 4)	Allowable inertial moment (kg•m²) (Note 5)	Allowable torque (N•m)
IX–TNN3015–5L–□–□–□–□–2 IX–UNN3015–5L–□–□–□–□–2	Axis 1	Arm 1	175	200	±120°	±0.010	3560mm/s (Composite speed)	0.49	1	3	65.3	90.9	0.015	1.9
	Axis 2	Arm 2	125	100	±130°									
	Axis 3	Vertical axis	—	100	150mm	±0.010	1106mm/s							
	Axis 4	Rotating axis	—	50	±360°	±0.005	1600°/s							

* In the above model code, specify the desired controller in □. For details, refer to "Explanation of SCARA Robot Model Items" (P. 10).

Common Specifications

Encode type	Absolute
User wiring	15-conductor AWG26 D-sub/15-pin connector with shield (socket)
User tubing	Air tube (O.D. ø4, I.D. ø2.5) x 3 (Normal working pressure 0.8MPa)
Alarm indicator (Note 6)	Red, small LED indicator x 1 (24 VDC must be supplied.)
Brake-release switch (Note 7)	Brake-release switch to prevent the vertical axis from dropping (24 VDC must be supplied.)

Ambient temperature/humidity	Temperature: 0~40°C, humidity: 20~85%RH or below (non-condensing)
Robot weight	20.8kg
Cable length (Note 8)	5L: 5m (standard), 10L: 10m (optional)

Dimensions

* The following illustrations also apply to the inverse type. The only difference is that the robot is installed upside down. (Refer to P. 2.)

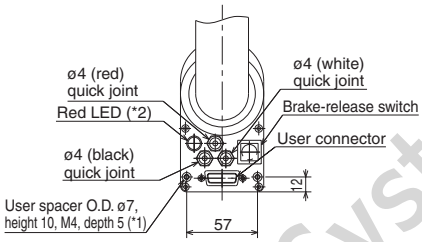

Detail view of panel

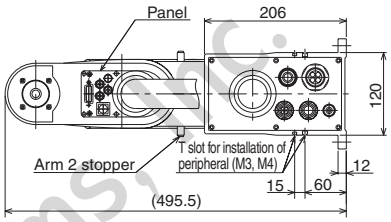

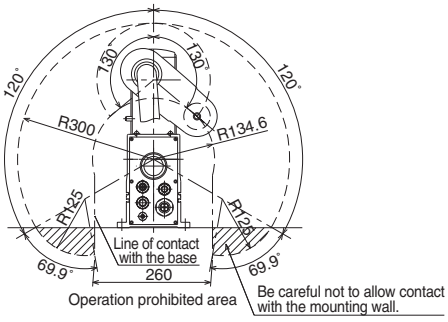

Work envelope

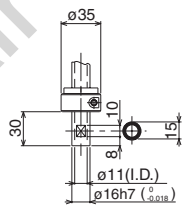

Enlarged view of tip

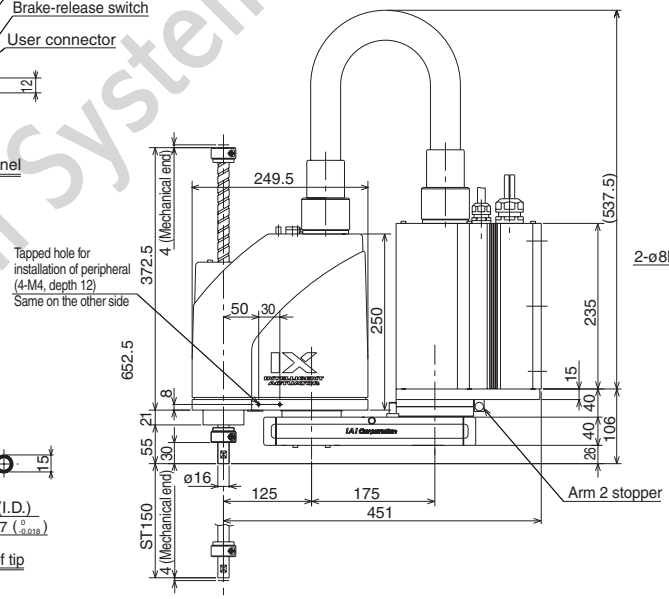

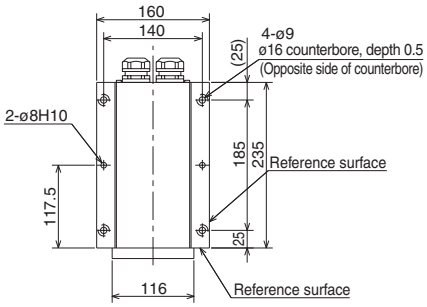

*1: The external force applied to each spacer must not exceed 30 N in the axial direction or 2 N•m in the rotating direction.
*2: To use the LED, the user must provide a circuit that takes signals from the controller's I/O output and supplies 24 VDC to the applicable LED terminal in the user connector.

Cables/tubes
- Motor/encoder cable 5m/10m
- Brake power cable 5m/10m
- User cable 5m/10m
- Air tube (3 pcs) 0.15m

Applicable Controller Specifications

Applicable controller	Features	Maximum I/O points (inputs/outputs)	Serial communication unit	Power-supply voltage	Page
XSEL-KX	General-purpose type offering excellent expandability	176/160 points	Can be installed.	AC200V	P37
XSEL-JX	Compact, space-saving type	80/64 points	Cannot be installed.		P37

Caution Refer to P. 6 for the explanations of (Note 1) to (Note 8).

IX-TNN3515 Small SCARA Robot Wall-Mount Type: Arm Length 350mm, Vertical (Z) Axis 150mm

IX-UNN3515 Small SCARA Robot Inverse Type: Arm Length 350mm, Vertical (Z) Axis 150mm

Type / Wall-mount/inverse type | Arm length / 350mm | Load capacity / 1kg rated/3kg maximum

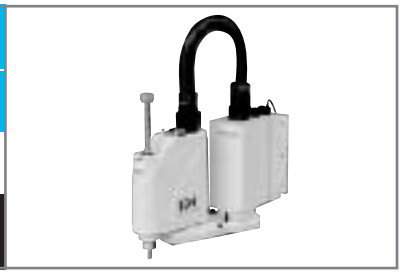

■ Model items

	Series	Model	Cable length	Controller type	Standard I/O	Expansion I/O	I/O cable length	Power-supply voltage
(Example)	IX	TNN3515	5L	KX	N1	EEE	2	2

* Refer to P. 10 for details on the model items.
* The above model code represents a combination of robot and controller.

Model/Specifications

Model	Axis configuration		Arm length (mm)	Motor capacity (W)	Work envelope	Positioning repeatability (mm) (Note 1)	Maximum operating speed (Note 2)	Standard cycle time (sec) (Note 3)	Load capacity (kg)		Axis 3 push force (N)		Axis 4 allowable load	
									Rated	Maximum	Push action (Note 4)	Maximum thrust (Note 4)	Allowable inertial moment (kg•m²) (Note 5)	Allowable torque (N•m)
IX–TNN3515–5L–□–□–□–□–2 IX–UNN3515–5L–□–□–□–□–2	Axis 1	Arm 1	225	200	±120°	±0.010	3979mm/s (Composite speed)	0.53	1	3	65.3	90.9	0.015	1.9
	Axis 2	Arm 2	125	100	±135°									
	Axis 3	Vertical axis	—	100	150mm	±0.010	1106mm/s							
	Axis 4	Rotating axis	—	50	±360°	±0.005	1600°/s							

* In the above model code, specify the desired controller in □. For details, refer to "Explanation of SCARA Robot Model Items" (P. 10).

Common Specifications

Encode type	Absolute
User wiring	15-conductor AWG26 D-sub/15-pin connector with shield (socket)
User tubing	Air tube (O.D. ø4, I.D. ø2.5) x 3 (Normal working pressure 0.8MPa)
Alarm indicator (Note 6)	Red, small LED indicator x 1 (24 VDC must be supplied.)
Brake-release switch (Note 7)	Brake-release switch to prevent the vertical axis from dropping (24 VDC must be supplied.)

Ambient temperature/humidity	Temperature: 0~40°C, humidity: 20~85%RH or below (non-condensing)
Robot weight	21.9kg
Cable length (Note 8)	5L: 5m (standard), 10L: 10m (optional)

Dimensions

* The following illustrations also apply to the inverse type. The only difference is that the robot is installed upside down. (Refer to P. 2.)

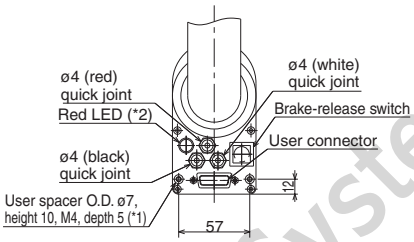

Detail view of panel

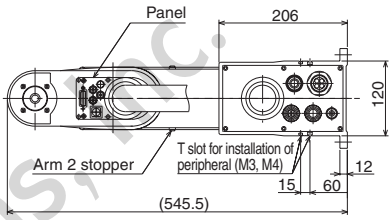

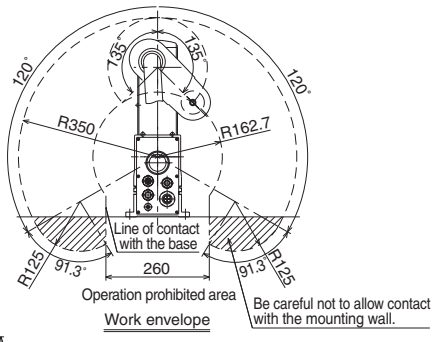

Work envelope

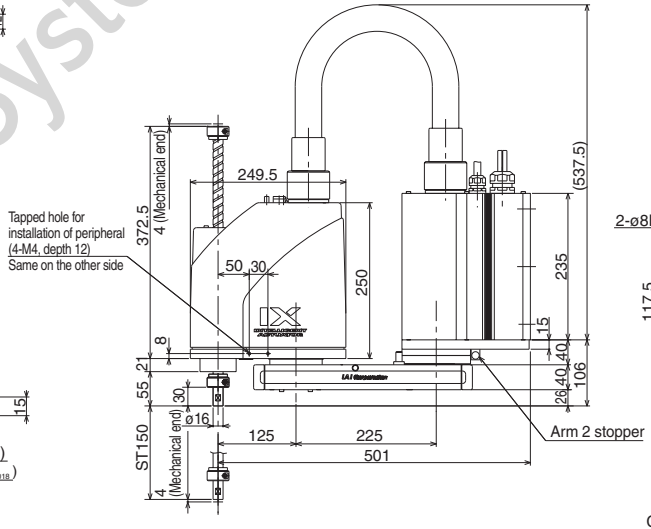

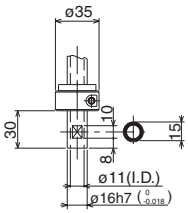

Enlarged view of tip

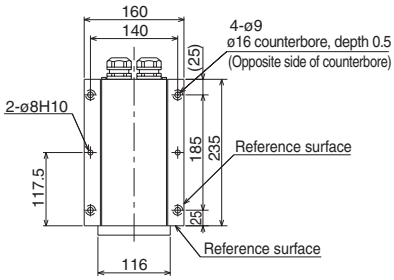

*1: The external force applied to each spacer must not exceed 30 N in the axial direction or 2 N•m in the rotating direction.
*2: To use the LED, the user must provide a circuit that takes signals from the controller's I/O output and supplies 24 VDC to the applicable LED terminal in the user connector.

Cables/tubes
- Motor/encoder cable 5m/10m
- Brake power cable 5m/10m
- User cable 5m/10m
- Air tube (3 pcs) 0.15m

Applicable Controller Specifications

Applicable controller	Features	Maximum I/O points (inputs/outputs)	Serial communication unit	Power-supply voltage	Page
XSEL-KX	General-purpose type offering excellent expandability	176/160 points	Can be installed.	AC200V	P37
XSEL-JX	Compact, space-saving type	80/64 points	Cannot be installed.		P37

Caution Refer to P. 6 for the explanations of (Note 1) to (Note 8).

IX-HNN5020 IX Medium SCARA Robot Ceiling-Mount Type: Arm Length 500mm, Vertical (Z) Axis 200mm

IX-INN5020 IX Medium SCARA Robot Inverse Type: Arm Length 500mm, Vertical (Z) Axis 200mm

Type / Ceiling-mount type | Arm length / 500mm | Load capacity / 2kg rated/10kg maximum

■ Model items

	Series	Model	Cable length	Controller type	Standard I/O	Expansion I/O	I/O cable length	Power-supply voltage
(Example)	IX –	HNN5020 –	5L –	KX –	N1 –	EEE –	2 –	2

* Refer to P. 10 for details on the model items.

* The above model code represents a combination of robot and controller.

Model/Specifications

Model	Axis configuration		Arm length (mm)	Motor capacity (W)	Work envelope	Positioning repeatability (mm) (Note 1)	Maximum operating speed (Note 2)	Standard cycle time (sec) (Note 3)	Load capacity (kg)		Axis 3 push force (N)		Axis 4 allowable load	
									Rated	Maximum	Push action (Note 4)	Maximum thrust (Note 4)	Allowable inertial moment (kg•m²) (Note 5)	Allowable torque (N•m)
IX–HNN5020–5L–□–□–□–□–2 IX–INN5020–5L–□–□–□–□–2	Axis 1	Arm 1	250	400	±120°	±0.010	6283mm/s (Composite speed)	0.44	2	10	108	152	0.06	3.3
	Axis 2	Arm 2	250	200	±135°									
	Axis 3	Vertical axis	—	200	200mm	±0.010	1393mm/s							
	Axis 4	Rotating axis	—	100	±360°	±0.005	1200°/s							

* In the above model code, specify the desired controller in □. For details, refer to "Explanation of SCARA Robot Model Items" (P. 10).

Common Specifications

Encode type	Absolute
User wiring	25-conductor AWG26 D-sub/25-pin connector with shield (socket)
User tubing	Air tube (O.D. ø6, I.D. ø4) x 2 (Normal working pressure 0.8MPa) Air tube (O.D. ø4, I.D. ø2.5) x 2 (Normal working pressure 0.8MPa)
Alarm indicator (Note 6)	Red, small LED indicator x 1 (24 VDC must be supplied.)
Brake-release switch (Note 7)	Brake-release switch to prevent the vertical axis from dropping (24 VDC must be supplied.)

Ambient temperature/humidity	Temperature: 0~40°C, humidity: 20~85%RH or below (non-condensing)
Robot weight	30.5kg
Cable length (Note 8)	5L: 5m (standard), 10L: 10m (optional)

Dimensions

* The following illustrations also apply to the inverse type.
The only difference is that the robot is installed upside down. (Refer to P. 2.)

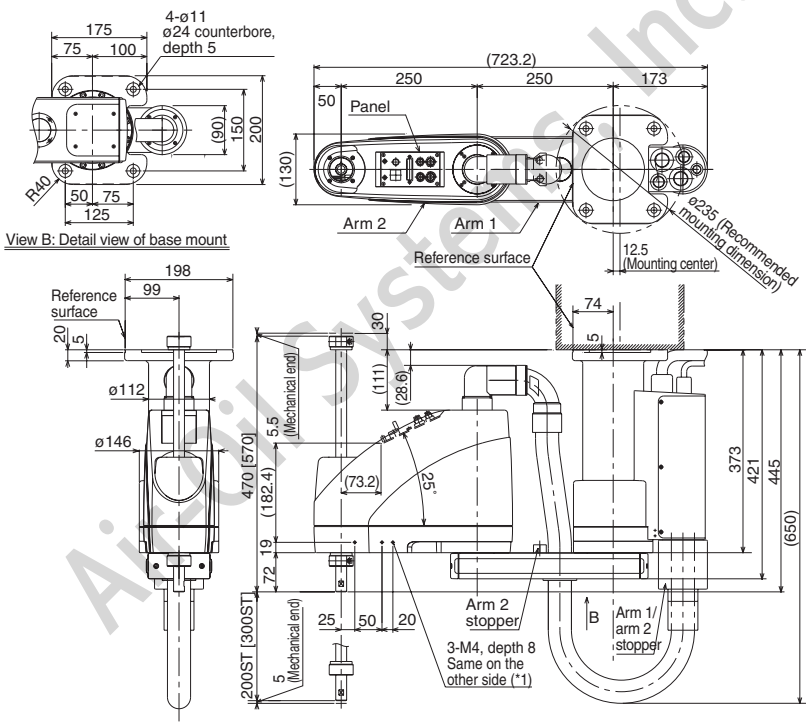

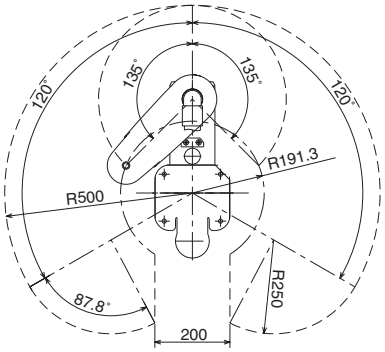

(Operation prohibited area)
Work envelope

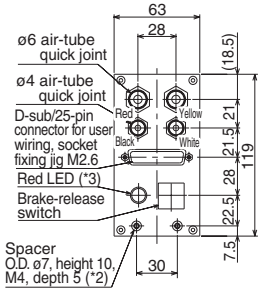

Detail view of panel

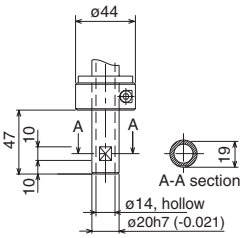

Detail view of tip

*1: The prepared hole 3-M4, depth 8 passes through the side panel of the arm. A long mounting screw will contact the mechanical parts inside the arm, so exercise caution.
*2: The external force applied to each spacer must not exceed 30 N in the axial direction or 2 N•m in the rotating direction.
*3: To use the LED, the user must provide a circuit that takes signals from the controller's I/O output and supplies 24 VDC to the applicable LED terminal in the user connector.

Cables/tubes
- Motor/encoder cable 5m/10m
- Brake power cable 5m/10m
- User cable 5m/10m
- Air tube (4 pcs) 0.15m

Applicable Controller Specifications

Applicable controller	Features	Maximum I/O points (inputs/outputs)	Serial communication unit	Power-supply voltage	Page
XSEL-KX	General-purpose type offering excellent expandability	176/160 points	Can be installed.	AC200V	P37

Caution Refer to P. 6 for the explanations of (Note 1) to (Note 8).

IX-HNN6020
IX Medium SCARA Robot Ceiling-Mount Type:
Arm Length 600mm, Vertical (Z) Axis 200mm

IX-INN6020
IX Medium SCARA Robot Inverse Type:
Arm Length 600mm, Vertical (Z) Axis 200mm

Type / Ceiling-mount type | Arm length / 600mm | Load capacity / 2kg rated/10kg maximum

■ Model items

	Series	Model	Cable length	Controller type	Standard I/O	Expansion I/O	I/O cable length	Power-supply voltage
(Example)	IX –	HNN6020 –	5L –	KX –	N1 –	EEE –	2 –	2

* Refer to P. 10 for details on the model items.
* The above model code represents a combination of robot and controller.

Model/Specifications

Model	Axis configuration		Arm length (mm)	Motor capacity (W)	Work envelope	Positioning repeatability (mm) (Note 1)	Maximum operating speed (Note 2)	Standard cycle time (sec) (Note 3)	Load capacity (kg)		Axis 3 push force (N)		Axis 4 allowable load	
									Rated	Maximum	Push action (Note 4)	Maximum thrust (Note 4)	Allowable inertial moment (kg•m²) (Note 5)	Allowable torque (N•m)
IX–HNN6020–5L–□–□–□–□–2 IX–INN6020–5L–□–□–□–□–2	Axis 1	Arm 1	350	400	±120°	±0.010	7121mm/s (Composite speed)	0.52	2	10	108	152	0.06	3.3
	Axis 2	Arm 2	250	200	±145°									
	Axis 3	Vertical axis	—	200	200mm	±0.010	1393mm/s							
	Axis 4	Rotating axis	—	100	±360°	±0.005	1200°/s							

* In the above model code, specify the desired controller in □. For details, refer to "Explanation of SCARA Robot Model Items" (P. 10).

Common Specifications

Encode type	Absolute
User wiring	25-conductor AWG26 D-sub/25-pin connector with shield (socket)
User tubing	Air tube (O.D. ø6, I.D. ø4) x 2 (Normal working pressure 0.8MPa) Air tube (O.D. ø4, I.D. ø2.5) x 2 (Normal working pressure 0.8MPa)
Alarm indicator (Note 6)	Red, small LED indicator x 1 (24 VDC must be supplied.)
Brake-release switch (Note 7)	Brake-release switch to prevent the vertical axis from dropping (24 VDC must be supplied.)

Ambient temperature/humidity	Temperature: 0~40°C, humidity: 20~85%RH or below (non-condensing)
Robot weight	31.5kg
Cable length (Note 8)	5L: 5m (standard), 10L: 10m (optional)

Dimensions

* The following illustrations also apply to the inverse type.
The only difference is that the robot is installed upside down. (Refer to P. 2.)

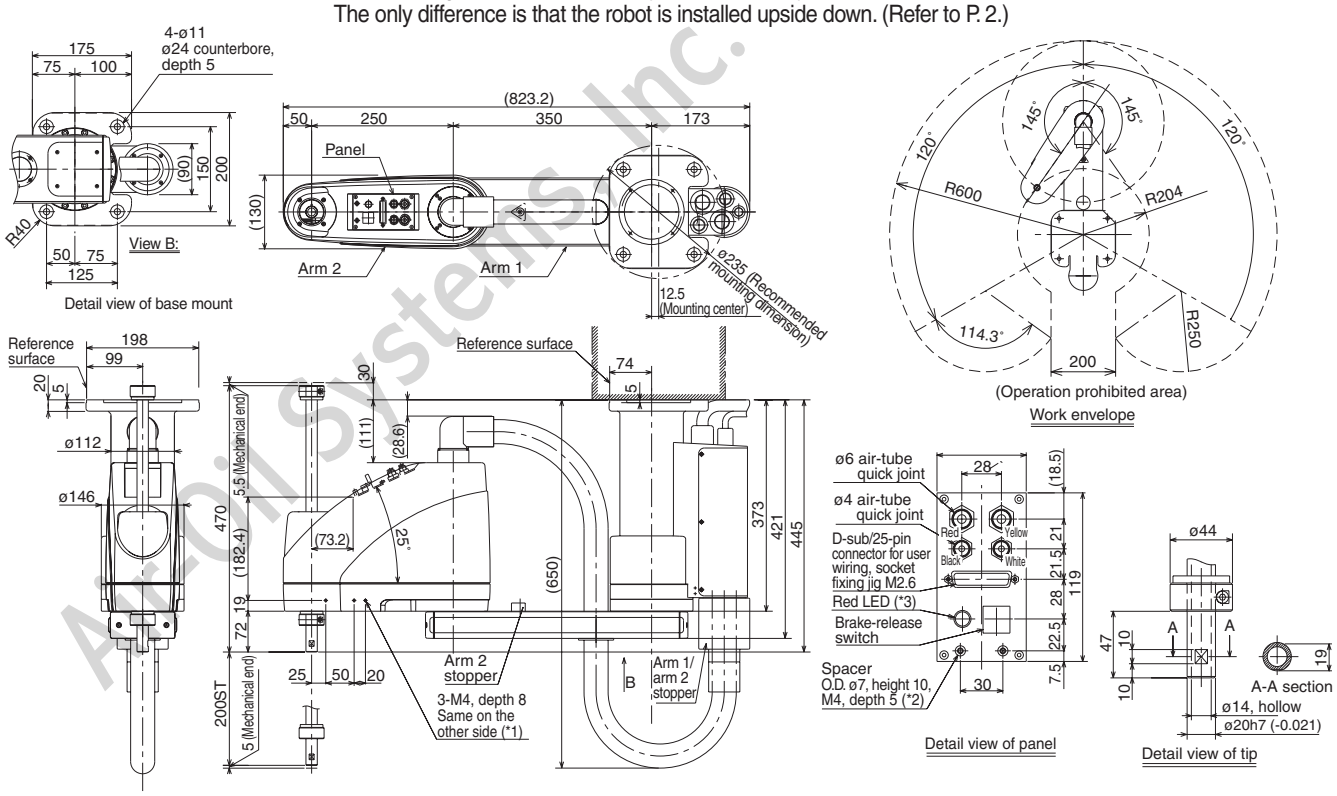

*1: The prepared hole 3-M4, depth 8 passes through the side panel of the arm. A long mounting screw will contact the mechanical parts inside the arm, so exercise caution.
*2: The external force applied to each spacer must not exceed 30 N in the axial direction or 2 N•m in the rotating direction.
*3: To use the LED, the user must provide a circuit that takes signals from the controller's I/O output and supplies 24 VDC to the applicable LED terminal in the user connector.

Cables/tubes
- Motor/encoder cable 5m/10m
- Brake power cable 5m/10m
- User cable 5m/10m
- Air tube (4 pcs) 0.15m

Applicable Controller Specifications

Applicable controller	Features	Maximum I/O points (inputs/outputs)	Serial communication unit	Power-supply voltage	Page
XSEL-KX	General-purpose type offering excellent expandability	176/160 points	Can be installed.	AC200V	P37

Caution Refer to P. 6 for the explanations of (Note 1) to (Note 8).

IX-HNN70□□

Large SCARA Robot Ceiling-Mount Type: Arm Length 700mm, Vertical (Z) Axis 200mm (400mm)

IX-INN70□□

Large SCARA Robot Inverse Type: Arm Length 700mm, Vertical (Z) Axis 200mm (400mm)

Type / Ceiling-mount/inverse type | Arm length / 700mm | Load capacity / 5kg rated/20kg maximum

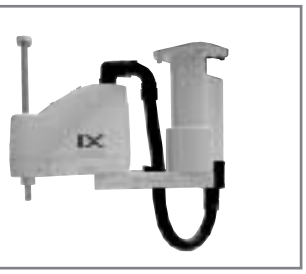

■ Model items

	Series	Model	Cable length	Controller type	Standard I/O	Expansion I/O	I/O cable length	Power-supply voltage
(Example)	IX	HNN7020	5L	KX	N	EEE	2	2

* Refer to P. 10 for details on the model items.

* The above model code represents a combination of robot and controller.

Model/Specifications

Model	Axis configuration		Arm length (mm)	Motor capacity (W)	Work envelope	Positioning repeatability (mm) (Note 1)	Maximum operating speed (Note 2)	Standard cycle time (sec) (Note 3)	Load capacity (kg)		Axis 3 push force (N)		Axis 4 allowable load	
									Rated	Maximum	Push action (Note 4)	Maximum thrust (Note 4)	Allowable inertial moment (kg•m²) (Note 5)	Allowable torque (N•m)
IX–HNN7020–5L–KX–□–□–□–2 [IX–HNN7040–5L–KX–□–□–□–2] IX–INN7020–5L–KX–□–□–□–2 [IX–INN7040–5L–KX–□–□–□–2]	Axis 1	Arm 1	350	750	±125°	±0.015 (XY)	6597mm/s (Composite speed)	0.50	5	20	188	265	0.1	6.7
	Axis 2	Arm 2	350	400	±145°									
	Axis 3	Vertical axis	—	400	200mm [400mm]	±0.010	1583mm/s							
	Axis 4	Rotating axis	—	100	±360°	±0.005	1200°/s							

* In the above model code, specify the desired controller in □. For details, refer to "Explanation of SCARA Robot Model Items" (P. 10).

Common Specifications

Encode type	Absolute
User wiring	25-conductor AWG26 D-sub/25-pin connector with shield (socket)
User tubing	Air tube (O.D. ø6, I.D. ø4) x 2 (Normal working pressure 0.8MPa) Air tube (O.D. ø4, I.D. ø2.5) x 2 (Normal working pressure 0.8MPa)
Alarm indicator (Note 6)	Red, small LED indicator x 1 (24 VDC must be supplied.)
Brake-release switch (Note 7)	Brake-release switch to prevent the vertical axis from dropping (24 VDC must be supplied.)

Ambient temperature/humidity	Temperature: 0~40°C, humidity: 20~85%RH or below (non-condensing)
Robot weight	58kg
Cable length (Note 8)	5L: 5m (standard), 10L: 10m (optional)

Dimensions

* The following illustrations also apply to the inverse type. The only difference is that the robot is installed upside down. (Refer to P. 2.)

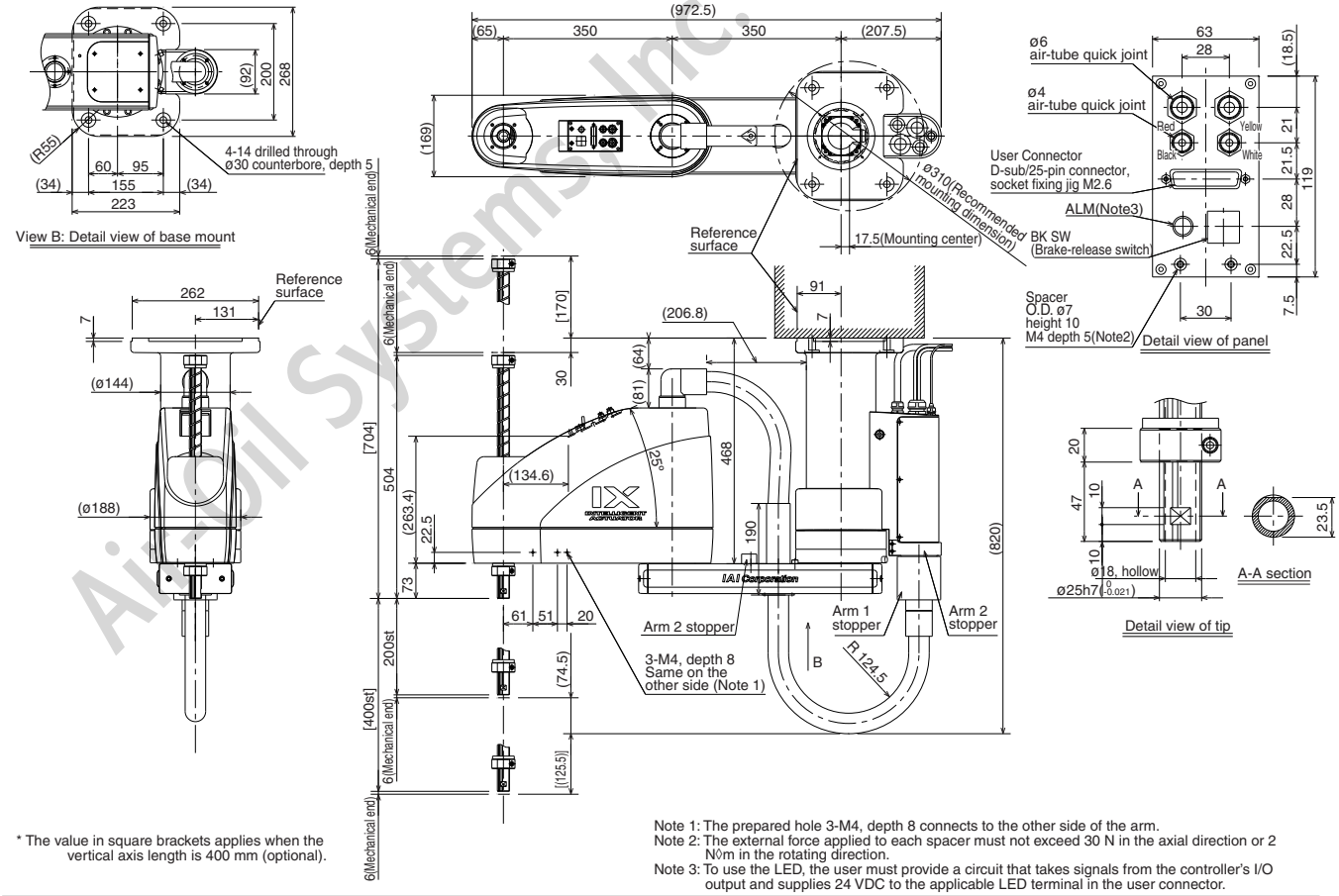

* The value in square brackets applies when the vertical axis length is 400 mm (optional).

Note 1: The prepared hole 3-M4, depth 8 connects to the other side of the arm.
Note 2: The external force applied to each spacer must not exceed 30 N in the axial direction or 2 N•m in the rotating direction.
Note 3: To use the LED, the user must provide a circuit that takes signals from the controller's I/O output and supplies 24 VDC to the applicable LED terminal in the user connector.

Applicable Controller Specifications

Applicable controller	Features	Maximum I/O points (inputs/outputs)	Serial communication unit	Power-supply voltage	Page
XSEL-KX	General-purpose type offering excellent expandability	Up to 192 points	Can be installed.	AC200V	P37

Caution Refer to P. 6 for the explanations of (Note 1) to (Note 8).

IX-HNN80□□

Large SCARA Robot Ceiling-Mount Type: Arm Length 800mm, Vertical (Z) Axis 200mm (400mm)

IX-INN80□□

Large SCARA Robot Inverse Type: Arm Length 800mm, Vertical (Z) Axis 200mm (400mm)

Type / Ceiling-mount/inverse type | Arm length / 800mm | Load capacity / 5kg rated/20kg maximum

■ Model items

	Series	Model	Cable length	Controller type	Standard I/O	Expansion I/O	I/O cable length	Power-supply voltage
(Example)	IX –	HNN8020 –	5L –	KX –	N –	EEE –	2 –	2

* Refer to P. 10 for details on the model items.

* The above model code represents a combination of robot and controller.

Model/Specifications

Model	Axis configuration		Arm length (mm)	Motor capacity (W)	Work envelope	Positioning repeatability (mm) (Note 1)	Maximum operating speed (Note 2)	Standard cycle time (sec) (Note 3)	Load capacity (kg)		Axis 3 push force (N)		Axis 4 allowable load	
									Rated	Maximum	Push action (Note 4)	Maximum thrust (Note 4)	Allowable inertial moment (kg•m²) (Note 5)	Allowable torque (N•m)
IX–HNN8020–5L–KX–□–□–□–2 [IX–HNN8040–5L–KX–□–□–□–2] IX–INN8020–5L–KX–□–□–□–2 [IX–INN8040–5L–KX–□–□–□–2]	Axis 1	Arm 1	450	750	±125°	±0.015 (XY)	7121mm/s (Composite speed)	0.52	5	20	188	265	0.1	6.7
	Axis 2	Arm 2	350	400	±145°									
	Axis 3	Vertical axis	—	400	200mm [400mm]	±0.010	1583mm/s							
	Axis 4	Rotating axis	—	100	±360°	±0.005	1200°/s							

* In the above model code, specify the desired controller in □. For details, refer to "Explanation of SCARA Robot Model Items" (P. 10).

Common Specifications

Encode type	Absolute
User wiring	25-conductor AWG26 D-sub/25-pin connector with shield (socket)
User tubing	Air tube (O.D. ø6, I.D. ø4) x 2 (Normal working pressure 0.8MPa) Air tube (O.D. ø4, I.D. ø2.5) x 2 (Normal working pressure 0.8MPa)
Alarm indicator (Note 6)	Red, small LED indicator x 1 (24 VDC must be supplied.)
Brake-release switch (Note 7)	Brake-release switch to prevent the vertical axis from dropping (24 VDC must be supplied.)

Ambient temperature/humidity	Temperature: 0~40°C, humidity: 20~85%RH or below (non-condensing)
Robot weight	58kg
Cable length (Note 8)	5L: 5m (standard), 10L: 10m (optional)

Dimensions

* The following illustrations also apply to the inverse type. The only difference is that the robot is installed upside down. (Refer to P. 2.)

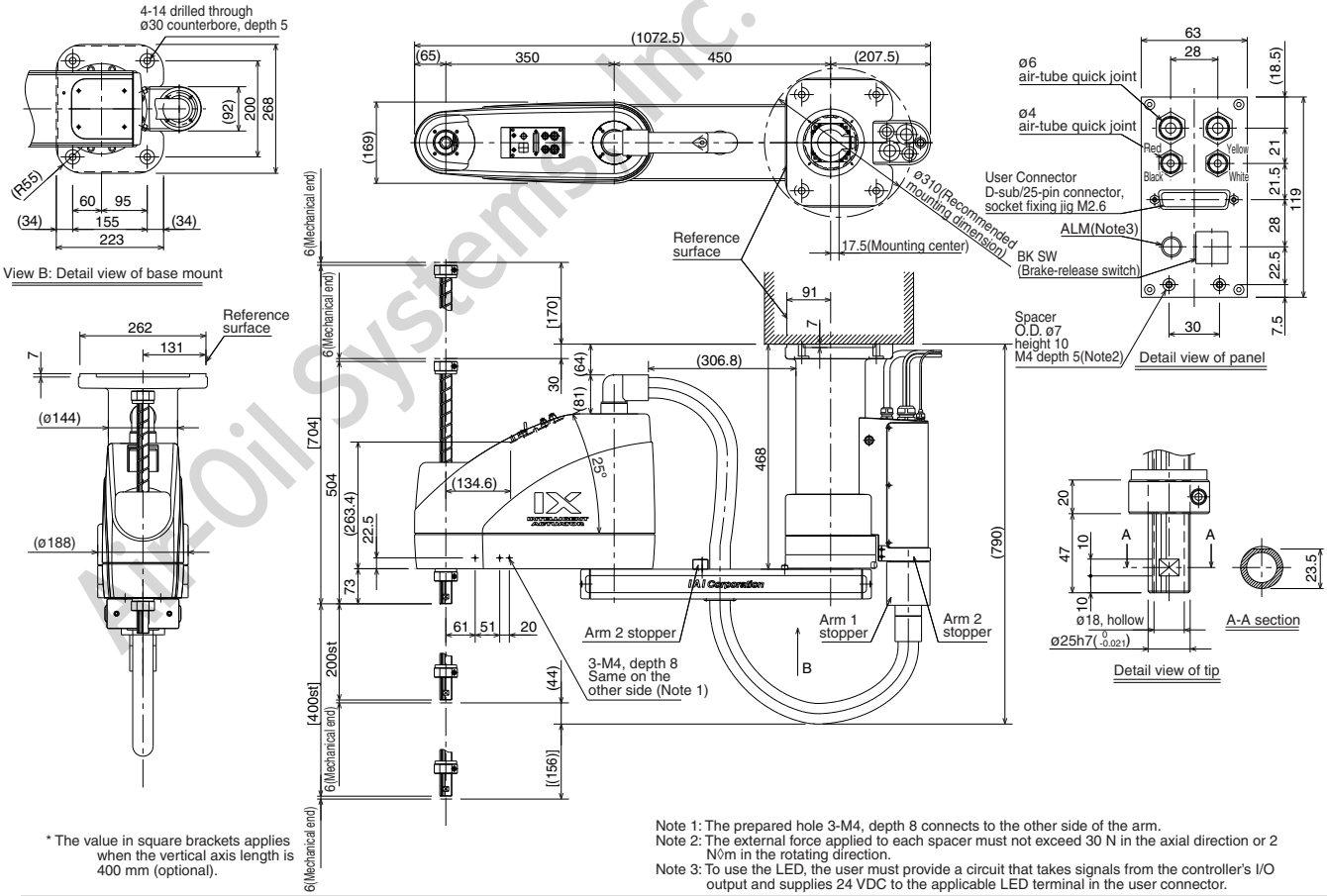

* The value in square brackets applies when the vertical axis length is 400 mm (optional).

Note 1: The prepared hole 3-M4, depth 8 connects to the other side of the arm.
Note 2: The external force applied to each spacer must not exceed 30 N in the axial direction or 2 N•m in the rotating direction.
Note 3: To use the LED, the user must provide a circuit that takes signals from the controller's I/O output and supplies 24 VDC to the applicable LED terminal in the user connector.

Applicable Controller Specifications

Applicable controller	Features	Maximum I/O points (inputs/outputs)	Serial communication unit	Power-supply voltage	Page
XSEL-KX	General-purpose type offering excellent expandability	Up to 192 points	Can be installed.	AC200V	P37

Caution Refer to P. 6 for the explanations of (Note 1) to (Note 8).

IX-NNC2515

Small SCARA Robot Clean Room type:
Arm Length 250mm, Vertical (Z) Axis 150mm

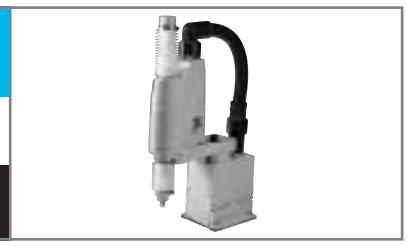

Type	Arm length	Load capacity
Clean Room type	250mm	1kg rated/3kg maximum

■ Model items

	Series	Model	Cable length	Controller type	Standard I/O	Expansion I/O	I/O cable length	Power-supply voltage
(Example)	IX	NNC2515	5L	KX	N1	EEE	2	2

* Refer to P. 10 for details on the model items.
* The above model code represents a combination of robot and controller.

Model/Specifications

Model	Axis configuration		Arm length (mm)	Motor capacity (W)	Work envelope	Positioning repeatability (mm) (Note 1)	Maximum operating speed (Note 2)	Standard cycle time (sec) (Note 3)	Load capacity (kg)		Axis 3 push force (N)		Axis 4 allowable load	
									Rated	Maximum	Push action (Note 4)	Maximum thrust (Note 4)	Allowable inertial moment (kg•m²) (Note 5)	Allowable torque (N•m)
IX–NNC2515–5L–□–□–□–□–2	Axis 1	Arm 1	125	200	±120°	±0.010	3142mm/s (Composite speed)	0.49	1	3	65.3	90.9	0.015	1.9
	Axis 2	Arm 2	125	100	±120°									
	Axis 3	Vertical axis	—	100	150mm	±0.010	1106mm/s							
	Axis 4	Rotating axis	—	50	±360°	±0.005	1600°/s							

* In the above model code, specify the desired controller in □. For details, refer to "Explanation of SCARA Robot Model Items" (P. 10).

Common Specifications

Encode type	Absolute
User wiring	15-conductor AWG26 D-sub/15-pin connector with shield (socket)
User tubing	Air tube (O.D. ø4, I.D. ø2.5) x 3 (Normal working pressure 0.8MPa)
Alarm indicator (Note 6)	Red, small LED indicator x 1 (24 VDC must be supplied.)
Brake-release switch (Note 7)	Brake-release switch to prevent the vertical axis from dropping (24 VDC must be supplied.)

Vacuum joint	Applicable tube O.D. ø12
Suction rate (Note 11)	60Nl/min
Cleanliness class	Conforming to class 10 (0.1μm)
Ambient temperature/humidity	Temperature: 0~40°C, humidity: 20~85%RH or below (non-condensing)
Robot weight	19kg
Cable length (Note 8)	5L: 5m (standard), 10L: 10m (optional)

Dimensions

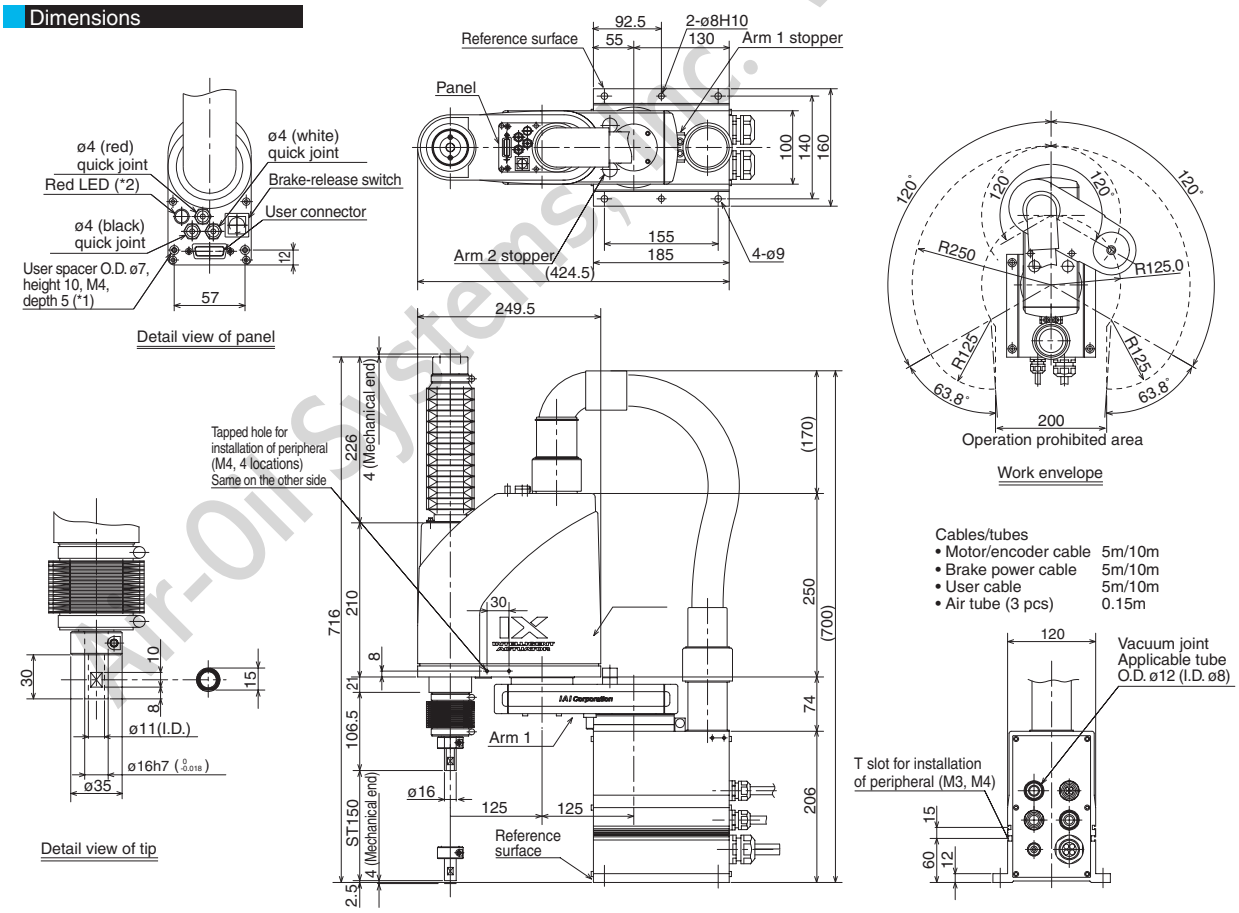

*1: The external force applied to each spacer must not exceed 30 N in the axial direction or 2 N•m in the rotating direction.
*2: To use the LED, the user must provide a circuit that takes signals from the controller's I/O output and supplies 24 VDC to the applicable LED terminal in the user connector.

Applicable Controller Specifications

Applicable controller	Features	Maximum I/O points (inputs/outputs)	Serial communication unit	Power-supply voltage	Page
XSEL-KX	General-purpose type offering excellent expandability	176/160 points	Can be installed.	AC200V	P37
XSEL-JX	Compact, space-saving type	80/64 points	Cannot be installed.		P37

Caution Refer to P. 6 for the explanations of (Note 1) to (Note 11).

IX-NNC3515

Small SCARA Robot Clean Room type:
Arm Length 350mm, Vertical (Z) Axis 150mm

Type / Clean Room type | Arm length / 250mm | Load capacity / 1kg rated/3kg maximum

■ Model items

	Series	Model	Cable length	Controller type	Standard I/O	Expansion I/O	I/O cable length	Power-supply voltage
(Example)	IX	NNC2515	5L	KX	N1	EEE	2	2

* Refer to P. 10 for details on the model items.
* The above model code represents a combination of robot and controller.

Model/Specifications

Model	Axis configuration		Arm length (mm)	Motor capacity (W)	Work envelope	Positioning repeatability (mm) (Note 1)	Maximum operating speed (Note 2)	Standard cycle time (sec) (Note 3)	Load capacity (kg)		Axis 3 push force (N)		Axis 4 allowable load	
									Rated	Maximum	Push action (Note 4)	Maximum thrust (Note 4)	Allowable inertial moment (kg•m²) (Note 5)	Allowable torque (N•m)
IX–NNC2515–5L–□–□–□–□–2	Axis 1	Arm 1	125	200	±120°	±0.010	3979mm/s (Composite speed)	0.58	1	3	65.3	90.9	0.018	1.9
	Axis 2	Arm 2	125	100	±120°									
	Axis 3	Vertical axis	—	100	150mm	±0.010	1106mm/s							
	Axis 4	Rotating axis	—	50	±360°	±0.005	1600°/s							

* In the above model code, specify the desired controller in □. For details, refer to "Explanation of SCARA Robot Model Items" (P. 10).

Common Specifications

Encode type	Absolute
User wiring	15-conductor AWG26 D-sub/15-pin connector with shield (socket)
User tubing	Air tube (O.D. ø4, I.D. ø2.5) x 3 (Normal working pressure 0.8MPa)
Alarm indicator (Note 6)	Red, small LED indicator x 1 (24 VDC must be supplied.)
Brake-release switch (Note 7)	Brake-release switch to prevent the vertical axis from dropping (24 VDC must be supplied.)

Vacuum joint	Applicable tube O.D. ø12
Suction rate (Note 11)	60Nl/min
Cleanliness class	Conforming to class 10 (0.1μm)
Ambient temperature/humidity	Temperature: 0~40°C, humidity: 20~85%RH or below (non-condensing)
Robot weight	20kg
Cable length (Note 8)	5L: 5m (standard), 10L: 10m (optional)

Dimensions

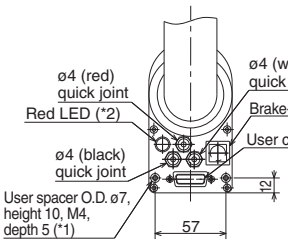

Detail view of panel

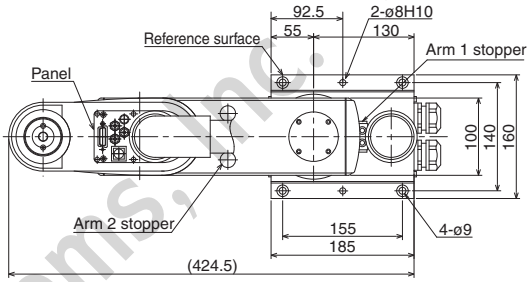

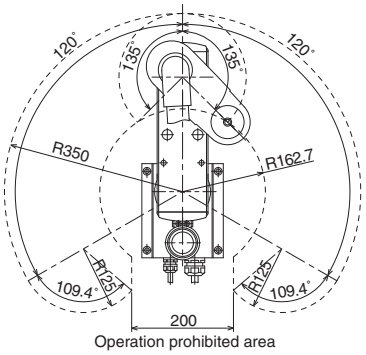

Work envelope

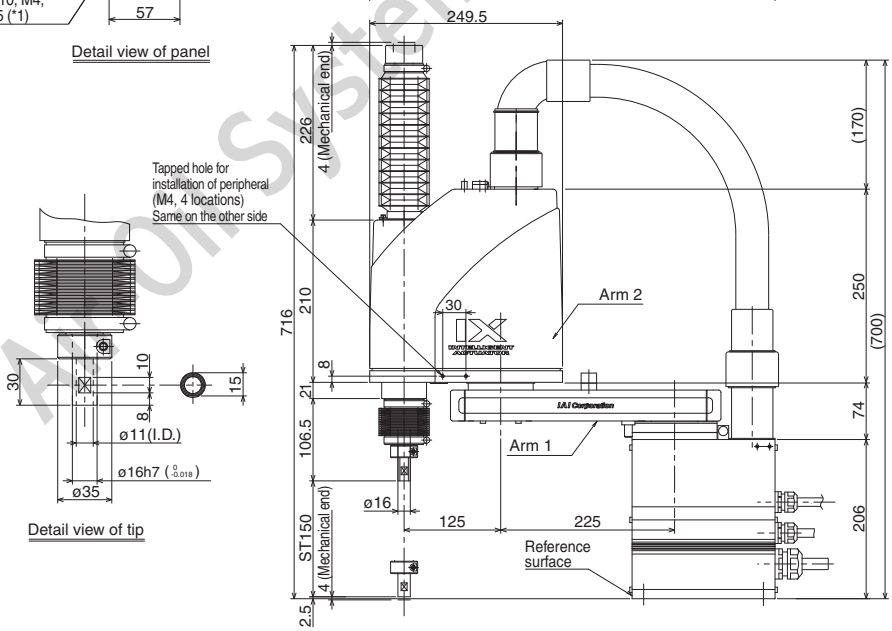

Detail view of tip

Cables/tubes
- Motor/encoder cable 5m/10m
- Brake power cable 5m/10m
- User cable 5m/10m
- Air tube (3 pcs) 0.15m

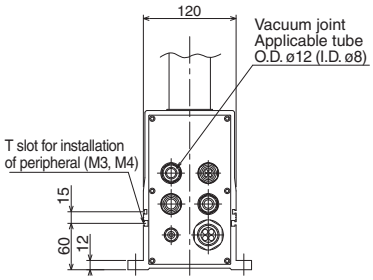

*1: The external force applied to each spacer must not exceed 30 N in the axial direction or 2 N•m in the rotating direction.
*2: To use the LED, the user must provide a circuit that takes signals from the controller's I/O output and supplies 24 VDC to the applicable LED terminal in the user connector.

Applicable Controller Specifications

Applicable controller	Features	Maximum I/O points (inputs/outputs)	Serial communication unit	Power-supply voltage	Page
XSEL-KX	General-purpose type offering excellent expandability	176/160 points	Can be installed.	AC200V	P37
XSEL-JX	Compact, space-saving type	80/64 points	Cannot be installed.		P37

Caution Refer to P. 6 for the explanations of (Note 1) to (Note 11).

IX-NNC50□□

IX Medium SCARA Robot Clean Room Type:
Arm Length 500mm, Vertical (Z) Axis 200mm (300mm)

Type	Arm length	Load capacity
Clean Room type	500mm	2kg rated/10kg maximum

■ Model items

	Series	Model	Cable length	Controller type	Standard I/O	Expansion I/O	I/O cable length	Power-supply voltage
(Example)	IX	NNC5020	5L	KX	N1	EEE	2	2

* Refer to P. 10 for details on the model items.
* The above model code represents a combination of robot and controller.

Model/Specifications

Model	Axis configuration		Arm length (mm)	Motor capacity (W)	Work envelope	Positioning repeatability (mm) (Note 1)	Maximum operating speed (Note 2)	Standard cycle time (sec) (Note 3)	Load capacity (kg)		Axis 3 push force (N)		Axis 4 allowable load	
									Rated	Maximum	Push action (Note 4)	Maximum thrust (Note 4)	Allowable inertial moment (kg•m²) (Note 5)	Allowable torque (N•m)
IX–NNC5020–5L–KX–□–□–□–2 [IX–NNC5030–5L–KX–□–□–□–2]	Axis 1	Arm 1	250	400	±120°	±0.010	6283mm/s (Composite speed)	0.47	2	10	108	152	0.06	3.3
	Axis 2	Arm 2	250	200	±145°									
	Axis 3	Vertical axis	—	200	200mm [300mm]	±0.010	1393mm/s							
	Axis 4	Rotating axis	—	100	±360°	±0.005	1200°/s							

* In the above model code, specify the desired controller in □. For details, refer to "Explanation of SCARA Robot Model Items" (P. 10).
* The value in square brackets applies when the vertical axis length is 300 mm. Other specifications apply commonly to both the vertical axis lengths of 200 mm and 300 mm.

Common Specifications

Encode type	Absolute
User wiring	25-conductor AWG26 D-sub/25-pin connector with shield (socket)
User tubing	Air tube (O.D. ø6, I.D. ø4) x 2 (Normal working pressure 0.8MPa) Air tube (O.D. ø4, I.D. ø2.5) x 2 (Normal working pressure 0.8MPa)
Alarm indicator (Note 6)	Red, small LED indicator x 1 (24 VDC must be supplied.)
Brake-release switch (Note 7)	Brake-release switch to prevent the vertical axis from dropping (24 VDC must be supplied.)

Vacuum joint	Applicable tube O.D. ø12
Suction rate (Note 11)	60Nl/min
Cleanliness class	Conforming to class 10 (0.1μm)
Ambient temperature/humidity	Temperature: 0~40°C, humidity: 20~85%RH or below (non-condensing)
Robot weight	31.5kg
Cable length (Note 8)	5L: 5m (standard), 10L: 10m (optional)

Dimensions

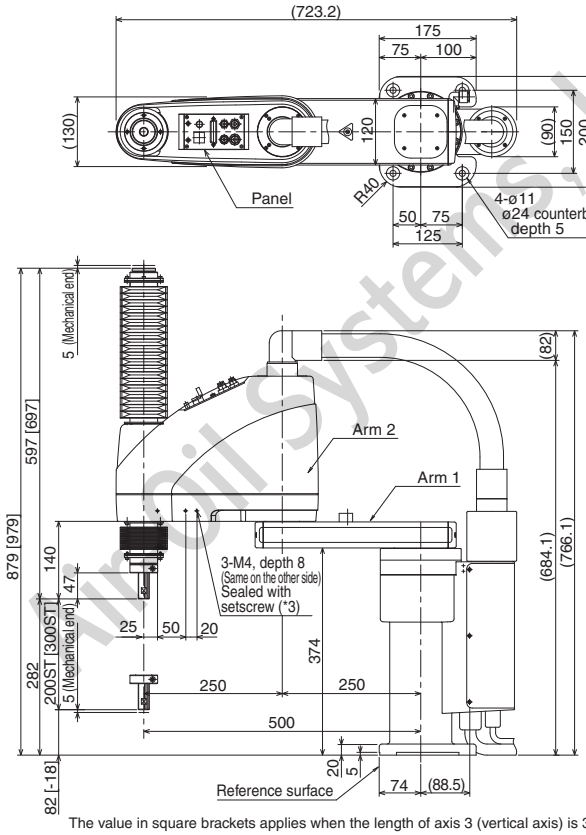

The value in square brackets applies when the length of axis 3 (vertical axis) is 300 mm.

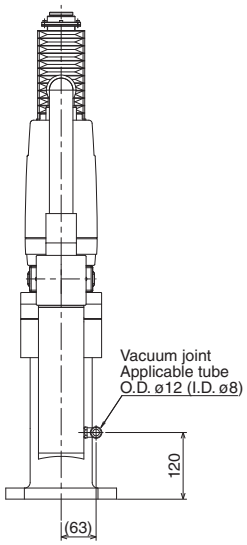

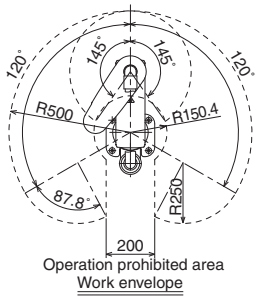

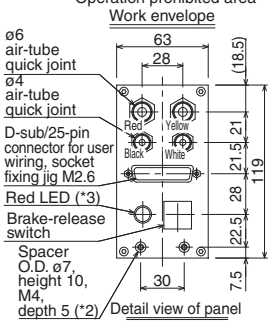

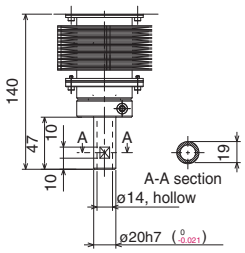

Detail view of tip

*1: The prepared hole 3-M4, depth 8 passes through the side panel of the arm.
*2: The external force applied to each spacer must not exceed 30 N in the axial direction or 2 N•m in the rotating direction.
*3: To use the LED, the user must provide a circuit that takes signals from the controller's I/O output and supplies 24 VDC to the applicable LED terminal in the user connector.

Cables/tubes
- Motor/encoder cable 5m/10m
- Brake power cable 5m/10m
- User cable 5m/10m
- Air tube (4 pcs) 0.15m

Applicable Controller Specifications

Applicable controller	Features	Maximum I/O points (inputs/outputs)	Serial communication unit	Power-supply voltage	Page
XSEL-KX	General-purpose type offering excellent expandability	176/160 points	Can be installed.	AC200V	P37

Caution Refer to P. 6 for the explanations of (Note 1) to (Note 11).

IX-NNC60□□

IX Medium SCARA Robot Clean Room Type:
Arm Length 600mm, Vertical (Z) Axis 200mm (300mm)

Type / Clean Room type | Arm length / 600mm | Load capacity / 5kg rated/20kg maximum

■ Model items

	Series	Model	Cable length	Controller type	Standard I/O	Expansion I/O	I/O cable length	Power-supply voltage
(Example)	IX	NNC6020	5L	KX	N1	EEE	2	2

* Refer to P. 10 for details on the model items.
* The above model code represents a combination of robot and controller.

Model/Specifications

Model	Axis configuration		Arm length (mm)	Motor capacity (W)	Work envelope	Positioning repeatability (mm) (Note 1)	Maximum operating speed (Note 2)	Standard cycle time (sec) (Note 3)	Load capacity (kg)		Axis 3 push force (N)		Axis 4 allowable load	
									Rated	Maximum	Push action (Note 4)	Maximum thrust (Note 4)	Allowable inertial moment (kg•m²) (Note 5)	Allowable torque (N•m)
IX–NNC6020–5L–KX–□–□–□–2 [IX–NNN6030–5L–KX–□–□–□–2]	Axis 1	Arm 1	350	400	±120°	±0.010	7121mm/s (Composite speed)	0.54	2	10	108	152	0.06	3.3
	Axis 2	Arm 2	250	200	±145°									
	Axis 3	Vertical axis	—	200	200mm [300mm]	±0.010	1393mm/s							
	Axis 4	Rotating axis	—	100	±360°	±0.005	1200°/s							

* In the above model code, specify the desired controller in □. For details, refer to "Explanation of SCARA Robot Model Items" (P. 10).
* The value in square brackets applies when the vertical axis length is 300 mm. Other specifications apply commonly to both the vertical axis lengths of 200 mm and 300 mm.

Common Specifications

Encode type	Absolute
User wiring	25-conductor AWG26 D-sub/25-pin connector with shield (socket)
User tubing	Air tube (O.D. ø6, I.D. ø4) x 2 (Normal working pressure 0.8MPa) Air tube (O.D. ø4, I.D. ø2.5) x 2 (Normal working pressure 0.8MPa)
Alarm indicator (Note 6)	Red, small LED indicator x 1 (24 VDC must be supplied.)
Brake-release switch (Note 7)	Brake-release switch to prevent the vertical axis from dropping (24 VDC must be supplied.)

Vacuum joint	Applicable tube O.D. ø12
Suction rate (Note 11)	60Nl/min
Cleanliness class	Conforming to class 10 (0.1μm)
Ambient temperature/humidity	Temperature: 0~40°C, humidity: 20~85%RH or below (non-condensing)
Robot weight	32.5kg
Cable length (Note 8)	5L: 5m (standard), 10L: 10m (optional)

Dimensions

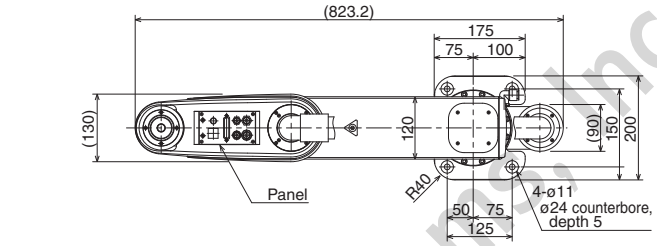

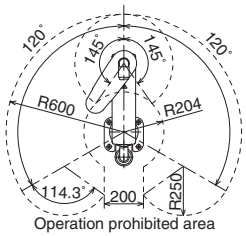

Operation prohibited area
Work envelope

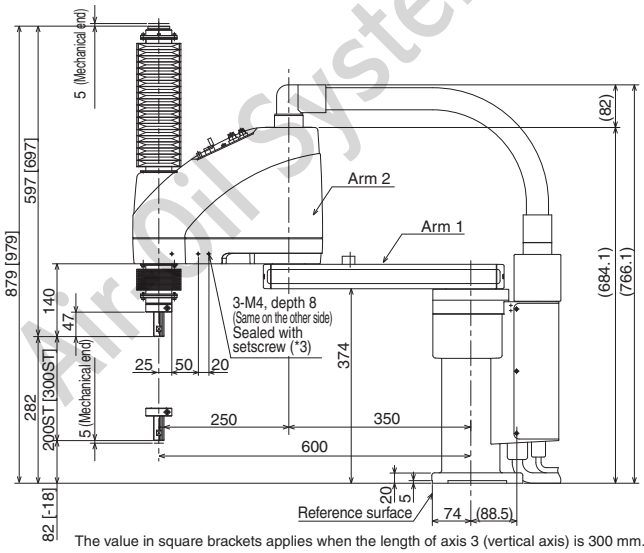

The value in square brackets applies when the length of axis 3 (vertical axis) is 300 mm.

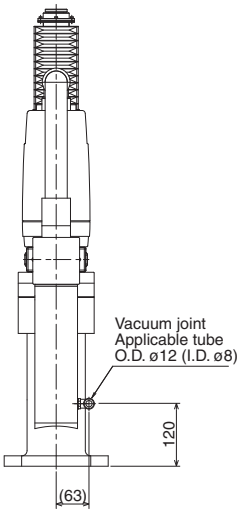

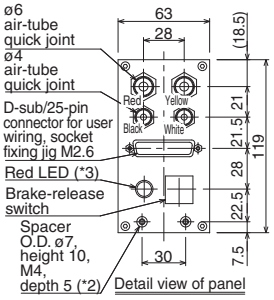

Detail view of panel

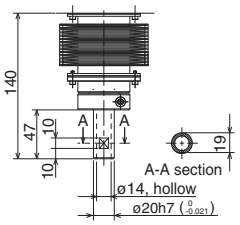

Detail view of tip

*1: The prepared hole 3-M4, depth 8 passes through the side panel of the arm.
*2: The external force applied to each spacer must not exceed 30 N in the axial direction or 2 N•m in the rotating direction.
*3: To use the LED, the user must provide a circuit that takes signals from the controller's I/O output and supplies 24 VDC to the applicable LED terminal in the user connector.

Cables/tubes
- Motor/encoder cable 5m/10m
- Brake power cable 5m/10m
- User cable 5m/10m
- Air tube (4 pcs) 0.15m

Applicable Controller Specifications

Applicable controller	Features	Maximum I/O points (inputs/outputs)	Serial communication unit	Power-supply voltage	Page
XSEL-KX	General-purpose type offering excellent expandability	176/160 points	Can be installed.	AC200V	P37

Caution Refer to P. 6 for the explanations of (Note 1) to (Note 11).

IX-NNC70□□

IX Large SCARA Robot Clean Room Type:
Arm Length 700mm, Vertical (Z) Axis 200mm (400mm)

Type / Clean Room type | Arm length / 700mm | Load capacity / 5kg rated/20kg maximum

■ Model items

	Series	Model	Cable length	Controller type	Standard I/O	Expansion I/O	I/O cable length	Power-supply voltage
(Example)	IX	NNC7020	5L	KX	N1	EEE	2	2

* In the above model code, specify the desired controller in o. For details, refer to the explanation on controller (P. 10).

Model/Specifications

Model	Axis configuration		Arm length (mm)	Motor capacity (W)	Work envelope	Positioning repeatability (mm) (Note 1)	Maximum operating speed (Note 2)	Standard cycle time (sec) (Note 3)	Load capacity (kg)		Axis 3 push force (N)		Axis 4 allowable load	
									Rated	Maximum	Push action (Note 4)	Maximum thrust (Note 4)	Allowable inertial moment (kg•m²) (Note 5)	Allowable torque (N•m)
IX–NNC7020–5L–KX–□–□–□–2 [IX–NNC7040–5L–KX–□–□–□–2]	Axis 1	Arm 1	350	750	±125°	±0.015	6597mm/s (Composite speed)	0.52	5	20	188	265	0.1	6.7
	Axis 2	Arm 2	350	400	±145°									
	Axis 3	Vertical axis	—	400	200mm [400mm]	±0.010	1583mm/s							
	Axis 4	Rotating axis	—	200	±360°	±0.005	1200°/s							

* In the above model code, specify the desired controller in □. For details, refer to "Explanation of SCARA Robot Model Items" (P. 10).

Common Specifications

Encode type	Absolute
User wiring	25-conductor AWG26 D-sub/25-pin connector with shield (socket)
User tubing	Air tube (O.D. ø6, I.D. ø4) x 2 (Normal working pressure 0.8MPa) Air tube (O.D. ø4, I.D. ø2.5) x 2 (Normal working pressure 0.8MPa)
Alarm indicator (Note 6)	Red, small LED indicator x 1 (24 VDC must be supplied.)
Brake-release switch (Note 7)	Brake-release switch to prevent the vertical axis from dropping (24 VDC must be supplied.)

Vacuum joint	Applicable tube O.D. ø12
Suction rate (Note 11)	80Nl/min
Cleanliness class	Conforming to class 10 (0.1μm)
Ambient temperature/humidity	Temperature: 0~40°C, humidity: 20~85%RH or below (non-condensing)
Robot weight	60kg
Cable length (Note 8)	5L: 5m (standard), 10L: 10m (optional)

Dimensions

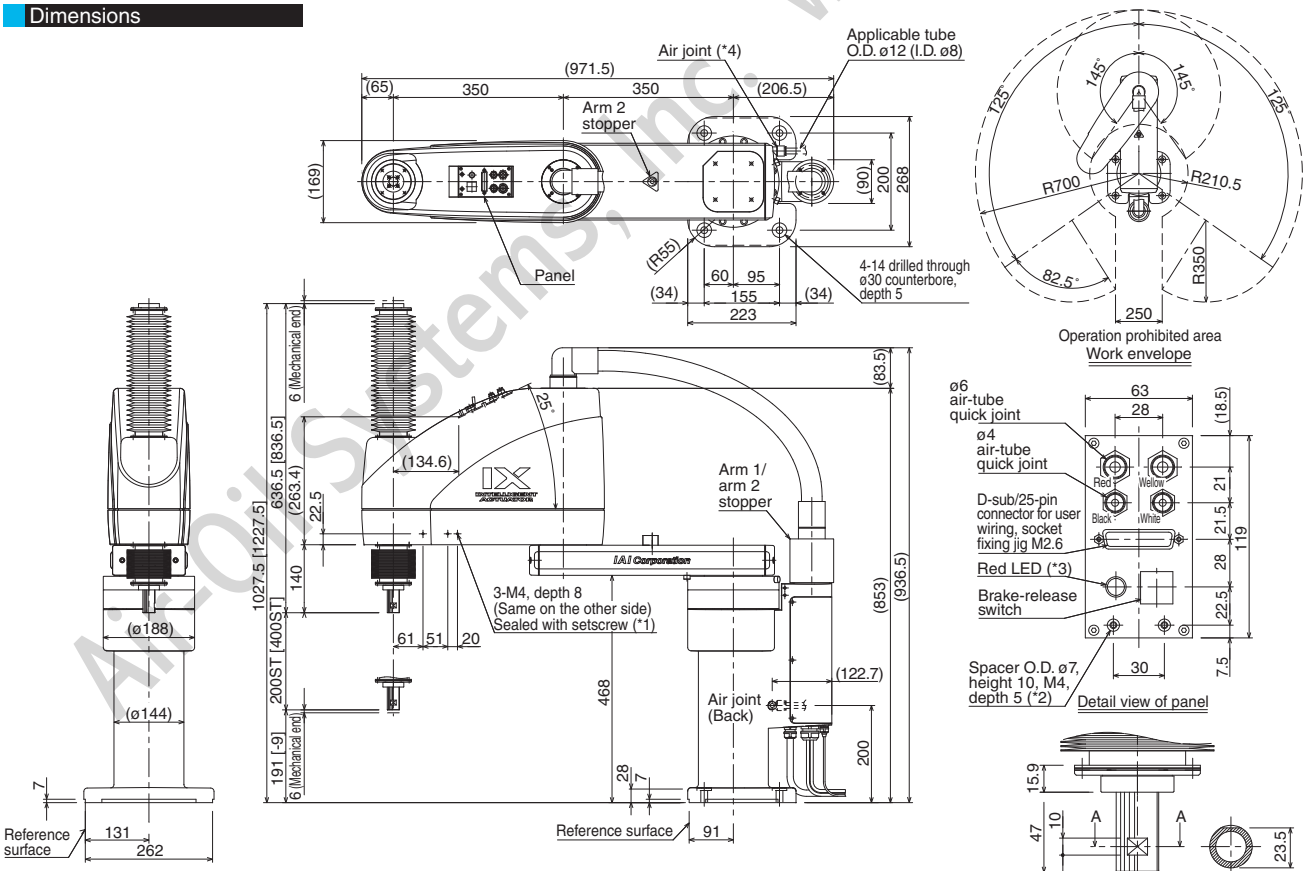

*1: The prepared hole 3-M4, depth 8 passes through the side panel of the arm.
*2: The external force applied to each spacer must not exceed 30 N in the axial direction or 2 N•m in the rotating direction.
*3: To use the LED, the user must provide a circuit that takes signals from the controller's I/O output and supplies 24 VDC to the applicable LED terminal in the user connector.
*4: The joint can be installed in the reverse direction (by disconnecting the PT3/8 plug and swapping it with the joint).

Cables/tubes
- Motor/encoder cable 5m/10m
- Brake power cable 5m/10m
- User cable 5m/10m
- Air tube (4 pcs) 0.15m

Applicable Controller Specifications

Applicable controller	Features	Maximum I/O points (inputs/outputs)	Serial communication unit	Power-supply voltage	Page
XSEL-KX	General-purpose type offering excellent expandability	176/160 points	Can be installed.	AC200V	P37

Caution Refer to P. 6 for the explanations of (Note 1) to (Note 11).

* Refer to P. 6 for other points to note.

IX-NNC80□□

IX Medium SCARA Robot Clean Room Type:
Arm Length 800mm, Vertical (Z) Axis 200mm (400mm)

Type / Clean Room type | Arm length / 800mm | Load capacity / 5kg rated/20kg maximum

■ Model items

	Series	Model	Cable length	Controller type	Standard I/O	Expansion I/O	I/O cable length	Power-supply voltage
(Example)	IX –	NNN8020 –	5L –	KX –	N1 –	EEE –	2 –	2

* Refer to P. 10 for details on the model items.
* The above model code represents a combination of robot and controller.

Model/Specifications

Model	Axis configuration		Arm length (mm)	Motor capacity (W)	Work envelope	Positioning repeatability (mm) (Note 1)	Maximum operating speed (Note 2)	Standard cycle time (sec) (Note 3)	Load capacity (kg)		Axis 3 push force (N)		Axis 4 allowable load	
									Rated	Maximum	Push action (Note 4)	Maximum thrust (Note 4)	Allowable inertial moment (kg•m²) (Note 5)	Allowable torque (N•m)
IX–NNC8020–5L–KX–□–□–□–2 [IX–NNC8040–5L–KX–□–□–□–2]	Axis 1	Arm 1	450	750	±125°	±0.015	7121mm/s (Composite speed)	0.52	5	20	188	265	0.1	6.7
	Axis 2	Arm 2	350	400	±145°									
	Axis 3	Vertical axis	—	400	200mm [400mm]	±0.010	1583mm/s							
	Axis 4	Rotating axis	—	200	±360°	±0.005	1200°/s							

* In the above model code, specify the desired controller in □. For details, refer to "Explanation of SCARA Robot Model Items" (P. 10).

Common Specifications

Encode type	Absolute
User wiring	25-conductor AWG26 D-sub/25-pin connector with shield (socket)
User tubing	Air tube (O.D. ø6, I.D. ø4) x 2 (Normal working pressure 0.8MPa) Air tube (O.D. ø4, I.D. ø2.5) x 2 (Normal working pressure 0.8MPa)
Alarm indicator (Note 6)	Red, small LED indicator x 1 (24 VDC must be supplied.)
Brake-release switch (Note 7)	Brake-release switch to prevent the vertical axis from dropping (24 VDC must be supplied.)

Vacuum joint	Applicable tube O.D. ø12
Suction rate (Note 11)	80Nl/min
Cleanliness class	Conforming to class 10 (0.1μm)
Ambient temperature/humidity	Temperature: 0~40°C, humidity: 20~85%RH or below (non-condensing)
Robot weight	62kg
Cable length (Note 8)	5L: 5m (standard), 10L: 10m (optional)

Dimensions

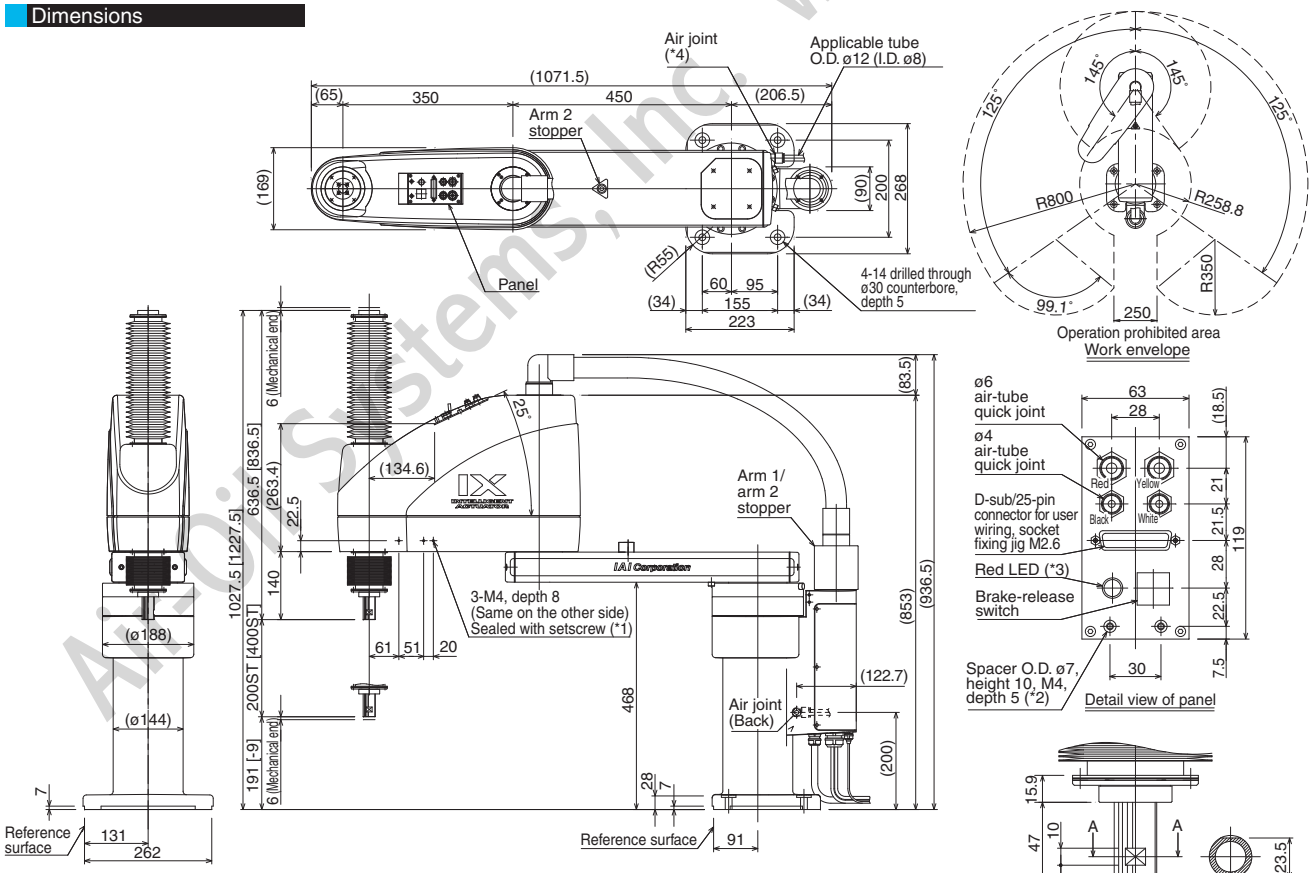

*1: The prepared hole 3-M4, depth 8 passes through the side panel of the arm.
*2: The external force applied to each spacer must not exceed 30 N in the axial direction or 2 N•m in the rotating direction.
*3: To use the LED, the user must provide a circuit that takes signals from the controller's I/O output and supplies 24 VDC to the applicable LED terminal in the user connector.
*4: The joint can be installed in the reverse direction.

Cables/tubes
- Motor/encoder cable 5m/10m
- Brake power cable 5m/10m
- User cable 5m/10m
- Air tube (4 pcs) 0.15m

Applicable Controller Specifications

Applicable controller	Features	Maximum I/O points (inputs/outputs)	Serial communication unit	Power-supply voltage	Page
XSEL-KX	General-purpose type offering excellent expandability	176/160 points	Can be installed.	AC200V	P37

Caution Refer to P. 6 for the explanations of (Note 1) to (Note 11).

* Refer to P. 6 for other points to note.

XSEL-JX/KX Dedicated IX Controller

Operating mode	Program operation
Number of storable programs	64 programs (6000 steps)
Number of storable positions	3000 positions
Power-supply voltage	

1 Features

The JX/KX controller is a high-performance X-SEL controller customized exclusively for use with the IX Series.
It combines the useful functions of the X-SEL controller with the dedicated IX Series commands to achieve a substantial improvement in utility.

1 Super SEL Language

The JX/KX controller adopts Super SEL Language, the same language used for our single-axis/Cartesian robots. Therefore, you can create programs just as easily as you do for your existing IAI controllers. If you are new to an IAI controller, the simple language structure will let you learn the necessary programming steps in no time.

2 Network Ready

The JX/KX controller supports DeviceNet (*1), CC-Link (*2), ProfiBus (*3), and Ethernet.
*1 DeviceNet is a registered trademark of ODVA.
*2 CC-Link is a registered trademark of Mitsubishi Electric Corporation.
*3 ProfiBus is a registered trademark of Siemens AG.

3 Multitasking

A maximum of 16 programs can be run at the same time, so you can transmit signals during operation or control a peripheral simultaneously.

4 Compact

The JX/KX controller is significantly smaller than the conventional M-SEL-IH controller.

2 Model

XSEL	-	KX	-	NNN5020	-	N1	-	EEE	-	2	-	2
❶		❷		❸		❹		❺		❻		❼

① Series	② Controller type	③ IX robot model	④ Standard I/O specification	⑤ Expansion I/O specification (Note 1)			⑥ I/O flat cable length (Note 2)	⑦ Power-supply voltage
			Slot 1	Slot 2	Slot 3	Slot 4		
XSEL	JX (compact type) KX (general-purpose type) KT (global specifications)	NNN2515~8040 (Standard Type) NSN5016~6016 (High-Speed Type) NNW2515~8040 (Dustoroof/Splash-proof Type) TNN3015~3515 (Wall-Mount Type) UNN3015~3515 (Wall-Mount Inverse Type) HNN5020~8040 (Ceiling Mount Type) INN5020~8040 (Ceiling Mount Inverse Type) NNC2515~8040 (Clean Room Type)	N1 [32 input/16 output NPN board] N3 (Note 3) [48 input/48 output NPN board] P1 [32 input/16 output PNP board] P3 (Note 3) [48 input/48 output PNP board] DV [DeviceNet 256/256 board] CC [CC-Link 256/256 board] PR [ProfiBus 256/256 board] ET [Ethernet data communication board]	E (not used) C (Note 4) [CC-Link connection 16/16 board] N1 [Expansion I/O NPN32/16] P1 [Expansion I/O PNP16/32] N3 (Note 4) [Multipoint I/O PNP48/48] P1 [Expansion I/O PNP32/16] CC [Expansion I/O PNP16/32] P3 (Note 4) [Multipoint I/O PNP48/48] SA (Note 4) [Expansion SIO type A] SB (Note 4) [Expansion SIO type B] SC (Note 4) [Expansion SIO type C]	E (not used) C (Note 4) [CC-Link connection 16/16 board] N1 [Expansion I/O NPN32/16] P1 [Expansion I/O PNP16/32] N3 (Note 4) [Multipoint I/O PNP48/48] P1 [Expansion I/O PNP32/16] CC [Expansion I/O PNP16/32] P3 (Note 4) [Multipoint I/O PNP48/48] SA (Note 4) [Expansion SIO type A] SB (Note 4) [Expansion SIO type B] SC (Note 4) [Expansion SIO type C]	E (not used) C (Note 4) [CC-Link connection 16/16 board] N1 [Expansion I/O NPN32/16] P1 [Expansion I/O PNP16/32] N3 (Note 4) [Multipoint I/O PNP48/48] P1 [Expansion I/O PNP32/16] CC [Expansion I/O PNP16/32] P3 (Note 4) [Multipoint I/O PNP48/48] SA (Note 4) [Expansion SIO type A] SB (Note 4) [Expansion SIO type B] SC (Note 4) [Expansion SIO type C]	2 : 2m 3 : 3m 5 : 5m 0 : None	2 : 200-V

(Note 1) Use a three-digit code (EEE) to specify the expansion slot type. In the case of the JX controller having only one expansion slot, specify the slot (slot 2) using the leftmost digit and leave ìEî in the remaining two digits (e.g., N1EE).
(Note 2) An I/O flat cable is supplied with each standard I/O board, expansion I/O board (50-conductor type) or multipoint I/O board (100-conductor type). The standard cable for standard/ expansion I/O board is 2 m long, but you can also specify 3 m or 5 m. A cable of any length up to 10 m can be fabricated, but a length other than 2, 3 or 5 m will require a special order. If you require a length other than 2, 3 or 5 m, select ì0 (None)î and place a separate order by specifying the I/O cable model. If you have selected a board other than standard, expansion or multipoint I/O board, select ì0î for the I/O flat cable length.
(Note 3) This is a dedicated option for the JX controller. Use an expansion N3/P3 board for the KX controller.
(Note 4) This is a dedicated option for the KX controller. C, N3, P3, SA, SB and SC cannot be specified for the JX controller.

3 I/O Wiring Diagrams

■Input Part External input specifications (NPN specification)

Item	Specification
Input power supply	DC24V ±10%
Input current	7mA/point
On/off voltage	On voltage --- 16.0VDC minimum, Off voltage --- 5.0VDC maximum
Insulation method	Photocoupler insulation
External devices	(1) No-voltage contact (with a minimum load of approx. 5VDC/1mA) (2) Photoelectric/proximity sensor (NPN type) (3) Sequencer transistor output (open-collector type) (4) Sequencer contact output (with a minimum load of approx. 5VDC/1mA)

[Input Circuit]

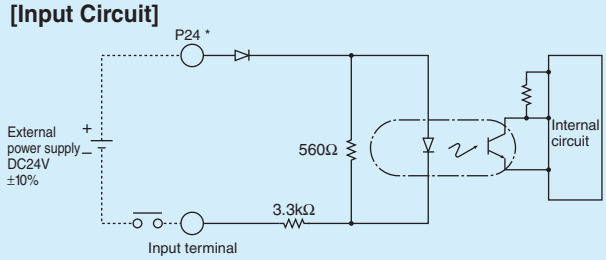

*

	K (general-purpose) type	J (compact) type
P24	I/O24V connector, 24VIN	I/O interface, pin No. 1

■Output Part External output specifications (NPN specification)

Item	Specification	
Load voltage	DC24V	Use TD62084 (or equivalent).
Maximum load current	100mA/point, 400mA peak (total current)	
Leak current	0.1mA/point maximum	
Insulation method	Photocoupler insulation	
External devices	(1) Miniature relay, (2) Sequencer input unit	

[Output Circuit]

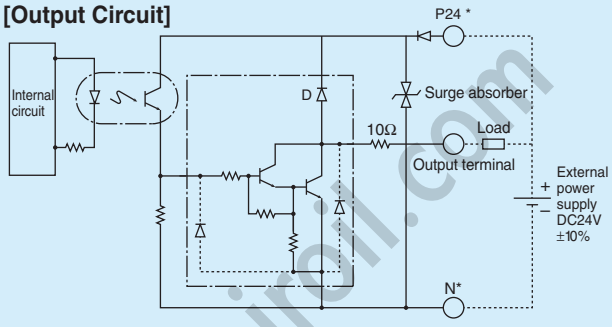

*

	K (general-purpose) type	J (compact) type
P24	I/O24V connector, 24VIN	I/O interface, pin No. 1
N	I/O24V connector, OV	I/O interface, pin No. 50

■Input Part External input specifications (PNP specification)

Item	Specification
Input power supply	DC24V ±10%
Input current	7mA/point
On/off voltage	On voltage --- 19.0VDC minimum, Off voltage --- 8.0VDC maximum
Insulation method	Photocoupler insulation
External devices	(1) No-voltage contact (with a minimum load of approx. 5VDC/1mA) (2) Photoelectric/proximity sensor (PNP type) (3) Sequencer transistor output (open-collector type) (4) Sequencer contact output (with a minimum load of approx. 5VDC/1mA)

[Input Circuit]

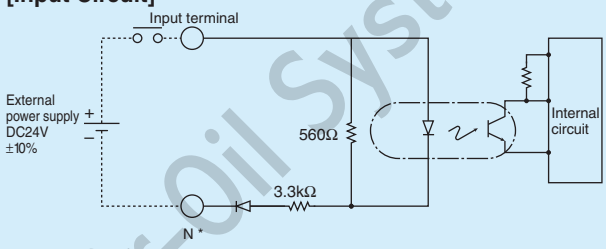

*

	K (general-purpose) type	J (compact) type
N	I/O24V connector, OV	I/O interface, pin No. 50

■Output Part External output specifications (PNP specification)

Item	Specification	
Load voltage	DC24V	Use TD62784 (or equivalent).
Maximum load current	100mA/point, 400mA/8ports	
Leak current	0.1mA/point maximum	
Insulation method	Photocoupler insulation	
External devices	(1) Miniature relay, (2) Sequencer input unit	

Note) The maximum total load current for every eight ports from output port No. 300 is limited to 400 mA. (The total maximum load current for output port No. 300 + n to No. 300 + n + 7 becomes 400 mA, where n is 0 or a multiple of 8.)

[Output Circuit]

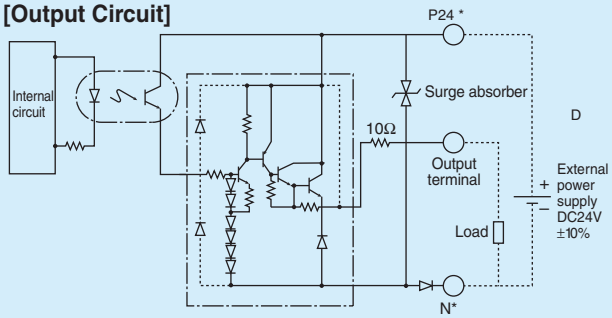

*

	K (general-purpose) type	J (compact) type
P24	I/O24V connector, 24VIN	I/O interface, pin No. 1
N	I/O24V connector, OV	I/O interface, pin No. 50

4 I/O Signals

Standard I/O Signals

Pin No.	Category	Port No.	Standard setting
1		–	NC
2	Input	000	Program start
3		001	General-purpose input
4		002	General-purpose input
5		003	General-purpose input
6		004	General-purpose input
7		005	General-purpose input
8		006	General-purpose input
9		007	Program specification (PRG No. 1)
10		008	Program specification (PRG No. 2)
11		009	Program specification (PRG No. 4)
12		010	Program specification (PRG No. 8)
13		011	Program specification (PRG No. 10)
14		012	Program specification (PRG No. 20)
15		013	Program specification (PRG No. 40)
16		014	General-purpose input
17		015	General-purpose input
18		016	General-purpose input
19		017	General-purpose input
20		018	General-purpose input
21		019	General-purpose input
22		020	General-purpose input
23		021	General-purpose input
24		022	General-purpose input
25		023	General-purpose input
26		024	General-purpose input
27		025	General-purpose input
28		026	General-purpose input
29		027	General-purpose input
30		028	General-purpose input
31		029	General-purpose input
32		030	General-purpose input
33		031	General-purpose input
34	Output	300	Alarm output
35		301	Ready output
36		302	Emergency stop output
37		303	General-purpose output
38		304	General-purpose output
39		305	General-purpose output
40		306	General-purpose output
41		307	General-purpose output
42		308	General-purpose output
43		309	General-purpose output
44		310	General-purpose output
45		311	General-purpose output
46		312	General-purpose output
47		313	General-purpose output
48		314	General-purpose output
49		315	General-purpose output
50		–	NC

Expansion I/O Signals (IA-103-X-32)

1		–	NC
2	Input	032	General-purpose input
3		033	General-purpose input
4		034	General-purpose input
5		035	General-purpose input
6		036	General-purpose input
7		037	General-purpose input
8		038	General-purpose input
9		039	General-purpose input
10		040	General-purpose input
11		041	General-purpose input
12		042	General-purpose input
13		043	General-purpose input
14		044	General-purpose input
15		045	General-purpose input
16		046	General-purpose input
17		047	General-purpose input
18		048	General-purpose input
19		049	General-purpose input
20		050	General-purpose input
21		051	General-purpose input
22		052	General-purpose input
23		053	General-purpose input
24		054	General-purpose input
25		055	General-purpose input
26		056	General-purpose input
27		057	General-purpose input
28		058	General-purpose input
29		059	General-purpose input
30		060	General-purpose input
31		061	General-purpose input
32		062	General-purpose input
33		063	General-purpose input
34	Output	316	General-purpose output
35		317	General-purpose output
36		318	General-purpose output
37		319	General-purpose output
38		320	General-purpose output
39		321	General-purpose output
40		322	General-purpose output
41		323	General-purpose output
42		324	General-purpose output
43		325	General-purpose output
44		326	General-purpose output
45		327	General-purpose output
46		328	General-purpose output
47		329	General-purpose output
48		330	General-purpose output
49		331	General-purpose output
50		–	NC

Expansion I/O Signals (IA-103-X-16)

1		–	NC
2	Input	032	General-purpose input
3		033	General-purpose input
4		034	General-purpose input
5		035	General-purpose input
6		036	General-purpose input
7		037	General-purpose input
8		038	General-purpose input
9		039	General-purpose input
10		040	General-purpose input
11		041	General-purpose input
12		042	General-purpose input
13		043	General-purpose input
14		044	General-purpose input
15		045	General-purpose input
16		046	General-purpose input
17		047	General-purpose input
18	Output	316	General-purpose output
19		317	General-purpose output
20		318	General-purpose output
21		319	General-purpose output
22		320	General-purpose output
23		321	General-purpose output
24		322	General-purpose output
25		323	General-purpose output
26		324	General-purpose output
27		325	General-purpose output
28		326	General-purpose output
29		327	General-purpose output
30		328	General-purpose output
31		329	General-purpose output
32		330	General-purpose output
33		331	General-purpose output
34		332	General-purpose output
35		333	General-purpose output
36		334	General-purpose output
37		335	General-purpose output
38		336	General-purpose output
39		337	General-purpose output
40		338	General-purpose output
41		339	General-purpose output
42		340	General-purpose output
43		341	General-purpose output
44		342	General-purpose output
45		343	General-purpose output
46		344	General-purpose output
47		345	General-purpose output
48		346	General-purpose output
49		347	General-purpose output
50		–	NC

Multipoint I/O Signals (JX type with board installed in standard slot)

Pin No.	Category	Color	Port No.	Standard setting
1		Brown 1	–	External 24VDC power supply for pin Nos. 2 to 25 and 51 to 74
2	Input	Red 1	000	Program start
3		Orange 1	001	General-purpose input
4		Yellow 1	002	General-purpose input
5		Green 1	003	General-purpose input
6		Blue 1	004	General-purpose input
7		Purple 1	005	General-purpose input
8		Gray 1	006	General-purpose input
9		White 1	007	Program specification (PRG No. 1)
10		Black 1	008	Program specification (PRG No. 2)
11		Brown 2	009	Program specification (PRG No. 4)
12		Red 2	010	Program specification (PRG No. 8)
13		Orange 2	011	Program specification (PRG No. 10)
14		Yellow 2	012	Program specification (PRG No. 20)
15		Green 2	013	Program specification (PRG No. 40)
16		Blue 2	014	General-purpose input
17		Purple 2	015	General-purpose input
18		Gray 2	016	General-purpose input
19		White 2	017	General-purpose input
20		Black 3	018	General-purpose input
21		Brown 3	019	General-purpose input
22		Red 3	020	General-purpose input
23		Orange 3	021	General-purpose input
24		Yellow 3	022	General-purpose input
25		Green 3	023	General-purpose input
26	–	Blue 3	–	External 24VDC power supply for pin Nos. 27 to 50 and 76 to 99
27	Input	Purple 3	024	General-purpose input
28		Gray 3	025	General-purpose input
29		White 3	026	General-purpose input
30		Black 3	027	General-purpose input
31		Brown 4	028	General-purpose input
32		Red 4	029	General-purpose input
33		Orange 4	030	General-purpose input
34		Yellow 4	031	General-purpose input
35		Green 4	032	General-purpose input
36		Blue 4	033	General-purpose input
37		Purple 4	034	General-purpose input
38		Gray 4	035	General-purpose input
39		White 4	036	General-purpose input
40		Black 4	037	General-purpose input
41		Brown 5	038	General-purpose input
42		Red 5	039	General-purpose input
43		Orange 5	040	General-purpose input
44		Yellow 5	041	General-purpose input
45		Green 5	042	General-purpose input
46		Blue 5	043	General-purpose input
47		Purple 5	044	General-purpose input
48		Gray 5	045	General-purpose input
49		White 5	046	General-purpose input
50		Black 5	047	General-purpose input

Pin No.	Category	Color	Port No.	Standard setting
51		Brown 1	300	Alarm output
52	Output	Red 1	301	Ready output
53		Orange 1	302	Emergency stop output
54		Yellow 1	303	General-purpose output
55		Green 1	304	General-purpose output
56		Blue 1	305	General-purpose output
57		Purple 1	306	General-purpose output
58		Gray 1	307	General-purpose output
59		White 1	308	General-purpose output
60		Black 1	309	General-purpose output
61		Brown 2	310	General-purpose output
62		Red 2	311	General-purpose output
63		Orange 2	312	General-purpose output
64		Yellow 2	313	General-purpose output
65		Green 2	314	General-purpose output
66		Blue 2	315	General-purpose output
67		Purple 2	316	General-purpose output
68		Gray 2	317	General-purpose output
69		White 2	318	General-purpose output
70		Black 3	319	General-purpose output
71		Brown 3	320	General-purpose output
72		Red 3	321	General-purpose output
73		Orange 3	322	General-purpose output
74		Yellow 3	323	General-purpose output
75	–	Green 3	–	External power supply for pin Nos. 2 to 25 and 51 to 74
76	Output	Blue 3	324	General-purpose output
77		Purple 3	325	General-purpose output
78		Gray 3	326	General-purpose output
79		White 3	327	General-purpose output
80		Black 3	328	General-purpose output
81		Brown 4	329	General-purpose output
82		Red 4	330	General-purpose output
83		Orange 4	331	General-purpose output
84		Yellow 4	332	General-purpose output
85		Green 4	333	General-purpose output
86		Blue 4	334	General-purpose output
87		Purple 4	335	General-purpose output
88		Gray 4	336	General-purpose output
89		White 4	337	General-purpose output
90		Black 4	338	General-purpose output
91		Brown 5	339	General-purpose output
92		Red 5	340	General-purpose output
93		Orange 5	341	General-purpose output
94		Yellow 5	342	General-purpose output
95		Green 5	343	General-purpose output
96		Blue 5	344	General-purpose output
97		Purple 5	345	General-purpose output
98		Gray 5	346	General-purpose output
99		White 5	347	General-purpose output
100		Black 5	–	OV for pins 27~50 & 76~99

Multipoint I/O Signals (KX type with board installed in expansion slot)

Pin No.	Category	Color	Port No.	Standard setting
1		Brown 1	–	External 24VDC power supply for pin Nos. 2 to 25 and 51 to 74
2	Input	Red 1	032	General-purpose input
3		Orange 1	033	General-purpose input
4		Yellow 1	034	General-purpose input
5		Green 1	035	General-purpose input
6		Blue 1	036	General-purpose input
7		Purple 1	037	General-purpose input
8		Gray 1	038	General-purpose input
9		White 1	039	General-purpose input
10		Black 1	040	General-purpose input
11		Brown 2	041	General-purpose input
12		Red 2	042	General-purpose input
13		Orange 2	043	General-purpose input
14		Yellow 2	044	General-purpose input
15		Green 2	045	General-purpose input
16		Blue 2	046	General-purpose input
17		Purple 2	047	General-purpose input
18		Gray 2	048	General-purpose input
19		White 2	049	General-purpose input
20		Black 3	050	General-purpose input
21		Brown 3	051	General-purpose input
22		Red 3	052	General-purpose input
23		Orange 3	053	General-purpose input
24		Yellow 3	054	General-purpose input
25		Green 3	055	General-purpose input
26		Blue 3	–	Note) (CD24V)
27	Input	Purple 3	056	General-purpose input
28		Gray 3	057	General-purpose input
29		White 3	058	General-purpose input
30		Black 3	059	General-purpose input
31		Brown 4	060	General-purpose input
32		Red 4	061	General-purpose input
33		Orange 4	062	General-purpose input
34		Yellow 4	063	General-purpose input
35		Green 4	064	General-purpose input
36		Blue 4	065	General-purpose input
37		Purple 4	066	General-purpose input
38		Gray 4	067	General-purpose input
39		White 4	068	General-purpose input
40		Black 4	069	General-purpose input
41		Brown 5	070	General-purpose input
42		Red 5	071	General-purpose input
43		Orange 5	072	General-purpose input
44		Yellow 5	073	General-purpose input
45		Green 5	074	General-purpose input
46		Blue 5	075	General-purpose input
47		Purple 5	076	General-purpose input
48		Gray 5	077	General-purpose input
49		White 5	078	General-purpose input
50		Black 5	079	General-purpose input

Pin No.	Category	Color	Port No.	Standard setting
51		Brown 1	316	General-purpose ioutput
52	Output	Red 1	317	General-purpose output
53		Orange 1	318	General-purpose output
54		Yellow 1	319	General-purpose output
55		Green 1	320	General-purpose output
56		Blue 1	321	General-purpose output
57		Purple 1	322	General-purpose output
58		Gray 1	323	General-purpose output
59		White 1	324	General-purpose output
60		Black 1	325	General-purpose output
61		Brown 2	326	General-purpose output
62		Red 2	327	General-purpose output
63		Orange 2	328	General-purpose output
64		Yellow 2	329	General-purpose output
65		Green 2	330	General-purpose output
66		Blue 2	331	General-purpose output
67		Purple 2	332	General-purpose output
68		Gray 2	333	General-purpose output
69		White 2	334	General-purpose output
70		Black 3	335	General-purpose output
71		Brown 3	336	General-purpose output
72		Red 3	337	General-purpose output
73		Orange 3	338	General-purpose output
74		Yellow 3	339	General-purpose output
75		Green 3	–	External power supply for pin Nos. 2 to 25 and 51 to 74
76	Output	Blue 3	340	General-purpose output
77		Purple 3	341	General-purpose output
78		Gray 3	342	General-purpose output
79		White 3	343	General-purpose output
80		Black 3	344	General-purpose output
81		Brown 4	345	General-purpose output
82		Red 4	346	General-purpose output
83		Orange 4	347	General-purpose output
84		Yellow 4	348	General-purpose output
85		Green 4	349	General-purpose output
86		Blue 4	350	General-purpose output
87		Purple 4	351	General-purpose output
88		Gray 4	352	General-purpose output
89		White 4	353	General-purpose output
90		Black 4	354	General-purpose output
91		Brown 5	355	General-purpose output
92		Red 5	356	General-purpose output
93		Orange 5	357	General-purpose output
94		Yellow 5	358	General-purpose output
95		Green 5	359	General-purpose output
96		Blue 5	360	General-purpose output
97		Purple 5	361	General-purpose output
98		Gray 5	362	General-purpose output
99		White 5	363	General-purpose output
100		Black 5	–	Note) (DV)

Note) There is no need to supply power to pin No. 26 (24VDC) and pin No. 100 (0V), since they take power from the I/O24V power supply in the controller.

5 Specifications

Item	Description	
Controller series/type	JX	KX
Number of controlled axes	4 axes	
Maximum connection axis output (W)	MAX450W	MAX1750W
Weight	5.0kg	7.0kg
Power-supply voltage	Single-phase 200 – 230VAC (factory setting)	
Operating voltage range	±10%	
Power frequency	50/60Hz	
Power capacity	MAX1750VA	MAX3050VA
Operating temperature range	0° – 40°C	
Operating humidity range	30% – 85%	
Storage temperature range	-10° – 65°C	
Axis control method	AC full-digital servo	
Position detection method	17-bit incremental encoder (wire-saving type)	
Programming language	Super SEL Language	
Program steps	6000 steps (total)	
Number of positions	3000 positions (total)	
Number of programs	64 programs	
Multitasking	16 programs	
Storage device	Flash ROM + SRAM battery backup	
Data input method	Teaching pendant or PC software	
Standard inputs	32 points (total of dedicated inputs + general-purpose inputs)	
Standard outputs	16 points (total of dedicated outputs + general-purpose outputs)	
Expansion inputs/outputs	Expandable to a maximum of 144 input/output points in total using an expansion PIO board(s)	Expandable to a maximum of 336 input/output points in total using an expansion PIO board(s)
Serial communication	Not possible	Possible if an expansion SIO board is used (optional)
Other inputs/outputs	Emergency stop input, safety gate input, system ready output	
Protection functions	Motor overcurrent, overload, motor driver temperature check, overload check, encoder open-circuit detection, soft limit over, system error, battery error	
Accessory	I/O flat cable	
Options	Teaching pendant, PC software, expansion I/O board, expansion SIO board	

6 External Dimensions

Controller

JX

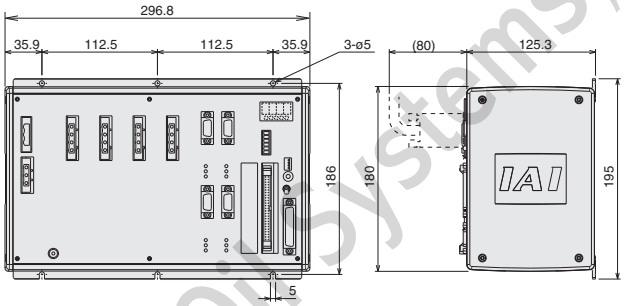

Controller

KX

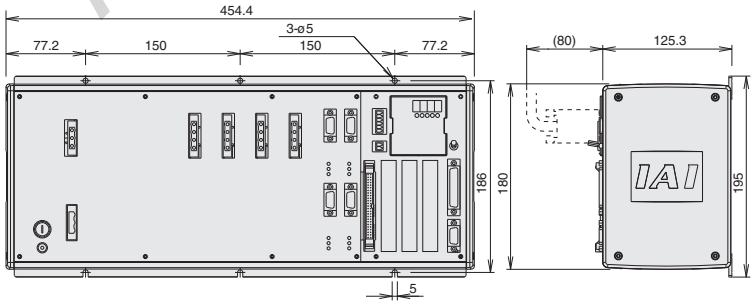

7 Name of Each Part

JX Type (Compact)

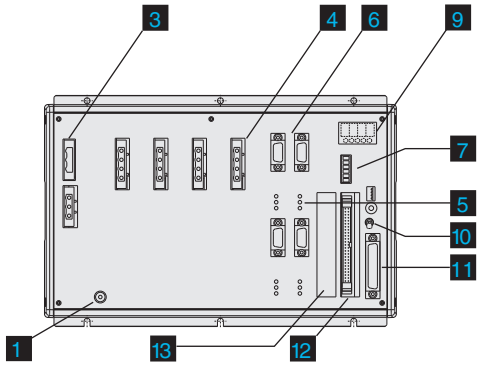

KX Type (General-purpose)

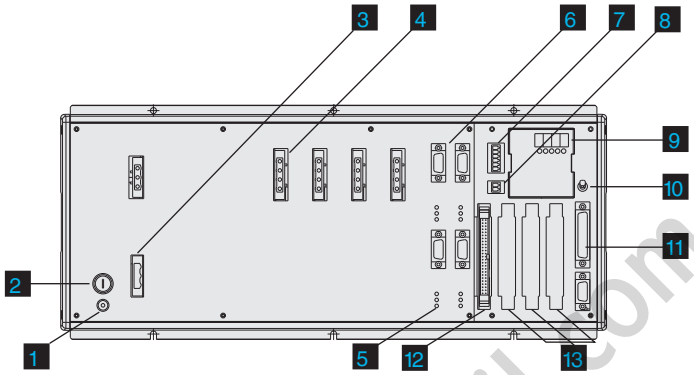

1 FG terminal

This terminal connects to FG of the enclosure.
The enclosure is connected to PE in the AC input part via wiring inside the controller.

2 Fuse holder (KX type only)

It holds the half-cut fuse for overcurrent protection of the AC input part.

3 Main power input connector

A single-phase 200-VAC input connector (Supplied with a cable-end plug. Refer to the opposite page.)

4 Motor cable connector

It connects the actuator's motor power cable.

5 Axis driver status LEDs

These LEDs are used to monitor the status of the driver CPU controlling the motor drive.
The three LEDs specified below are available:

Name	Color	Meaning when the LED is lit
ALM	Orange	An error is detected in the driver.
SVON	Green	The motor is driven with the servo turned on.
BATT ALM	Orange	The absolute battery voltage is low.

6 Encoder cable connector

This 15-pin/D-sub connector connects the actuator's encoder cable.

7 System I/O connector

This connector connects two control inputs relating to controller operation and one system status output. (Supplied with a cable-end plug. Refer to the opposite page.)

Name		
EMG	Emergency stop input	Operation is enabled if this input is ON. If the input is turned OFF, an emergency stop will be actuated.
ENB	Safety gate input	Operation is enabled if this input is ON. If the input is turned OFF, the servo will turn off.
RDY	System ready relay output	The status of the controller is output. Cascade connection is supported. The system is ready if this output is shorted, and not ready if it is open.

8 I/O24V power connector (KX type only)

13 14 This connector supplies insulated I/O power externally when DI/DOs are installed in any I/O slot (12 or 13). (Supplied with a cable-end plug. Refer to the opposite page.)

9 Panel window

This panel provides the four-digit, seven-segment LED display showing the system status, as well as five LED lamps.

10 Mode switch

This alternate switch with lock is used to specify the controller operation mode. To operate the switch, pull it forward and tilt.
Tilt the switch upward to select the MANU (manual operation) mode or downward to select the AUTO (automatic operation) mode. Teaching operation can only be performed in the MANU mode. In the MANU mode, automatic operation using external I/Os is not permitted.

11 Teaching connector

This D-sub/25-pin connector is used to connect a teaching pendant or PC to input program positions.

12 Standard I/O slot (Slot 1)

A standard PIO board with 32 input points and 16 output points is installed in the standard specification.

13 Expansion I/O slots (Slots 2, 3 and 4)

An expansion I/O board can be installed in any of these slots (optional).

Main Power Input Connector

This connector is used to connect 100/200 VAC power.
(The cable is provided by the user.)

Controller

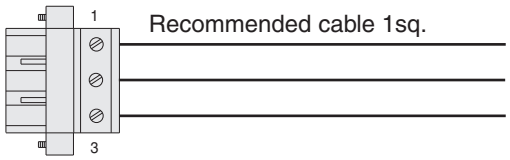

Recommended cable 1sq.

Single-phase 200VAC power

Plug: GMSTB2.5/3-STF-7.62 (Phoenix)

Wiring diagram

Signal	No.
N	1
L	2
PE	3

System I/O Connector

This connector is used to supply emergency stop, enable and system ready contacts from the controller to a PLC, etc.
(The cable is provided by the user.)

Controller

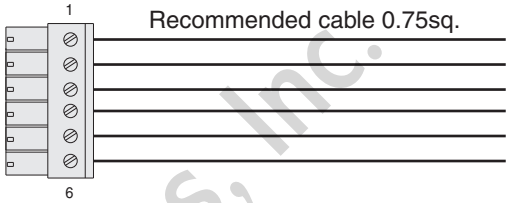

Recommended cable 0.75sq.

PLC, etc.

Plug: MC1.5/6-ST-3.5 (Phoenix)

Wiring diagram

Signal	No.
RDY −	1
RDY +	2
ENBIN	3
ENB +24VOUT	4
EMGIN	5
EMG+24VOUT	6

I/O24V Power Connector

This connector is used to supply 24V power when the controller's I/Os are used.
(The cable is provided by the user.)

Controller

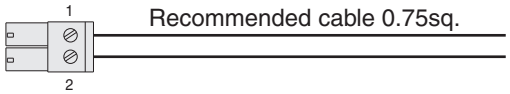

Recommended cable 0.75sq.

DC24V

Plug: MC1.5/2-ST-3.5 (Phoenix)

Wiring diagram

Signal	No.
0V	1
24VIN	2

8 Options

Teaching Pendant

Model **IA-T-X** (Standard)
IA-T-XD (With deadman switch)

Dimensions

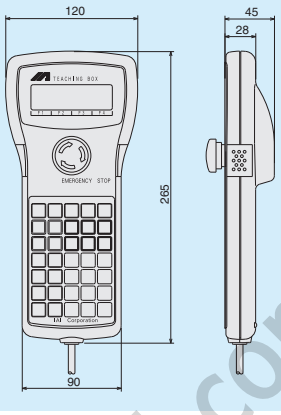

Features This teaching device provides functions for program/position input, test operation, monitoring, and so on.
The interactive design ensures easy operation for anyone.
The deadman switch specification offering added safety is also available.

Specifications

Item	Specification
Operating temperature / humidity Temperature:	0~40°C, humidity: 85%RH or below
Operating environment	Not subject to corrosive gases or significant dust.
Weight	Approx. 650g
Cable length	4m
Display	20 characters x 4 lines, LCD

Note
A product older than Ver. 1.08 cannot be used with a SCARA robot.

ANSI/CE-Compliant Teaching Pendant (Used exclusively with the general-purpose controller)

Model **IA-T-XA**

Dimensions

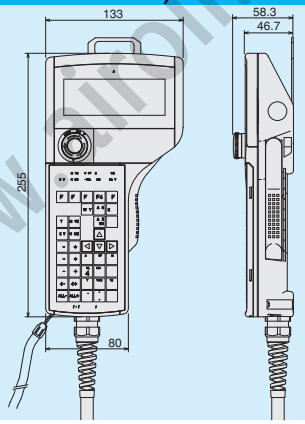

Features This teaching device with three position enable switches conforms to the ANSI and CE mark standards.
The large LCD screen and interactive navigation allow even a beginner to teach the robot easily and safely.

Specifications

Item	Specification
Operating temperature / humidity Temperature:	0~40°C, humidity: 30~85%RH (non-condensing)
Protective structure	IP54 (excluding cable connectors)
Weight	600g or less (excluding cables)
Cable length	5m
Display	32 characters x 8 lines, LCD

PC Software (Windows type only)

Model **IA-101-X-MW** (DOS/V version)
IA-101-X-CW (PC98 version)

Note
A product older than Ver. 2.0.0.0 cannot be used with a SCARA robot.

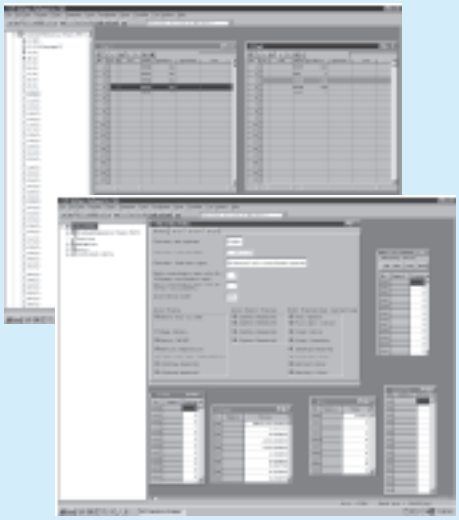

Features This startup assistance software provides functions for program/position input, test operation and monitoring.
It significantly enhances the debugging functions to help reduce the startup time.

Description
- Software (floppy disk)
  (The software runs on Windows 95, 98, NT, 2000 and ME.)
- PC connection cable 5m + Emergency stop box (Model CB-ST-E1MW050-EB)

Dimensions

PC connection cable (Model CB-ST-E1MW050)

Note
If you are ordering a PC connection cable separately for maintenance purpose, specify CB-ST-E1MW050. If you are ordering a PC cable and an emergency stop box as a set, specify CB-ST-E1MW050-EB.

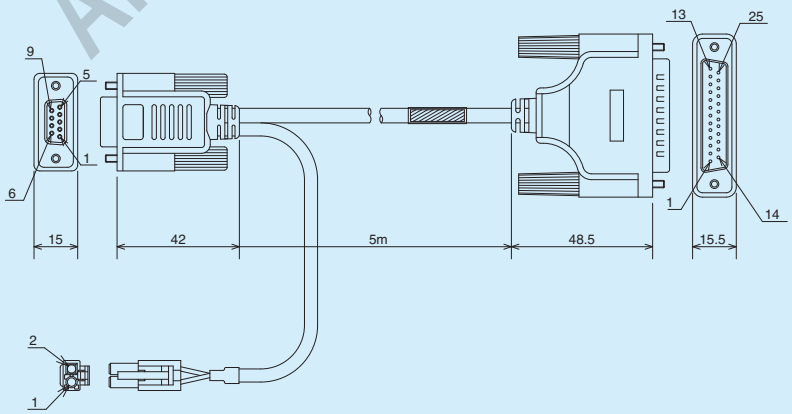

Wiring diagram

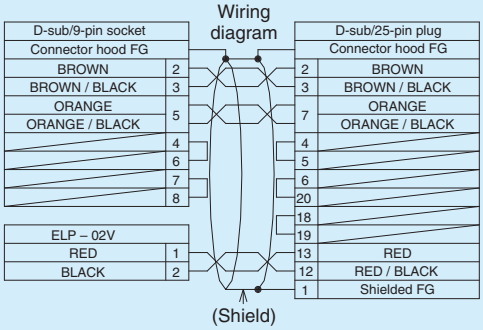

Expansion PIO Board

Description This optional board is used to add I/Os (inputs/outputs).
With the general-purpose controller, a maximum of three expansion PIO boards can be installed in the expansion slots.
(With the 3/4-axis type compact controller, one expansion PIO board can be installed in the expansion slot.)

Description	Expansion I/O board model	Order model (controller model)	Expansion I/O board slot	Total I/Os (standard + expansion)
32 input points / 16 output points NPN specification	IA-103-X-32	XSEL-JX-3 (4) -□-N1-N1EE-□-□	Expansion slot 1	64 input points / 32 output points
		XSEL-KX-□-□-N1-N1EE-□-□	Expansion slot 1	64 input points / 32 output points
		XSEL-KX-□-□-N1-N1N1E-□-□	Expansion slots 1, 2	96 input points / 48 output points
		XSEL-KX-□-□-N1-N1N1N1-□-□	Expansion slots 1, 2, 3	128 input points / 64 output points
32 input points / 16 output points PNP specification	IA-103-X-32-P	XSEL-JX-3 (4) -□-P1-P1EE-□-□	Expansion slot 1	64 input points / 32 output points
		XSEL-KX-□-□-P1-P1EE-□-□	Expansion slot 1	64 input points / 32 output points
		XSEL-KX-□-□-P1-P1P1E-□-□	Expansion slots 1, 2	96 input points / 48 output points
		XSEL-KX-□-□-P1-P1P1P1-□-□	Expansion slots 1, 2, 3	128 input points / 64 output points
16 input points / 32 output points NPN specification	IA-103-X-16	XSEL-JX-3 (4) -□-N1-N2EE-□-□	Expansion slot 1	48 input points / 48 output points
		XSEL-KX-□-□-N1-N2EE-□-□	Expansion slot 1	48 input points / 48 output points
		XSEL-KX-□-□-N1-N2N2E-□-□	Expansion slots 1, 2	64 input points / 80 output points
		XSEL-KX-□-□-N1-N2N2N2-□-□	Expansion slots 1, 2, 3	80 input points / 112output points
16 input points / 32 output points PNP specification	IA-103-X-16-P	XSEL-JX-3 (4) -□-□-P1-P2EE-□-□	Expansion slot 1	48 input points / 48 output points
		XSEL-KX-□-□-P1-P2EE-□-□	Expansion slot 1	48 input points / 48 output points
		XSEL-KX-□-□-P1-P2P2E-□-□	Expansion slots 1, 2	64 input points / 80 output points
		XSEL-KX-□-□-P1-P2P2P2-□-□	Expansion slots 1, 2, 3	80 input points /112 output points

Expansion SIO Board (Used exclusively with the general-purpose controller)

Description This board is used to establish serial communication with external devices.
It has two channel ports and supports one of three communication formats using the supplied joint cable.

Specifications IA-105-X-MW-A (SIO board + joint cable ① x 2)
IA-105-X-MW-B (SIO board + joint cable ② x 1)
IA-105-X-MW-C (SIO board + joint cable ② x 1)

Communication format	Expansion SIO board model	Order model (controller model)	Network board slot	Remarks
RS232C	IA-105-X-MW-A	XSEL-KX-□-□-N1-SAEE-□-□	Expansion slot 1	A maximum of three boards can be installed (Note 1).
RS422	IA-105-X-MW-B	XSEL-KX-□-□-N1-SBEE-□-□	Expansion slot 1	
RS485	IA-105-X-MW-C	XSEL-KX-□-□-N1-SCEE-□-□	Expansion slot 1	

(Note 1) The current capacity may not be enough depending on how many expansion boards are used in addition to the standard board.
If you want to install three boards, consult IAI beforehand.

Joint cable ① Model: CB-ST-232J001

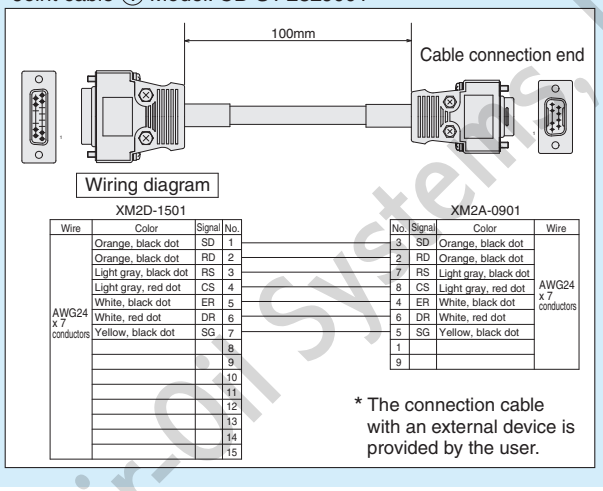

Joint cable ② Model: CB-ST-422J010

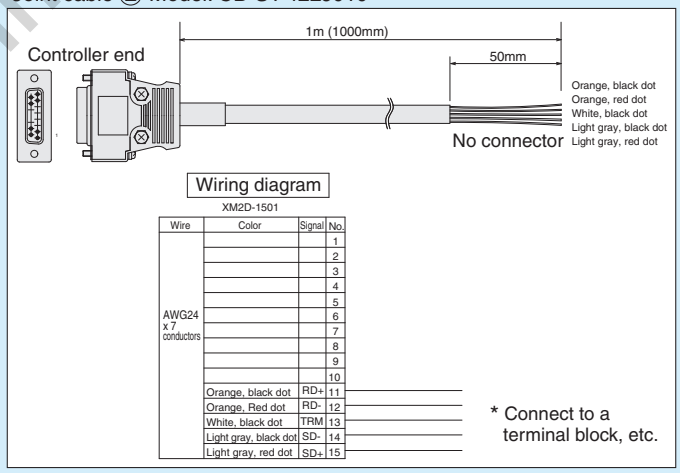

Network Board

Description This communication board is used for connection to a field network.

Description	Expansion I/O board model	Order model (controller model)	Expansion I/O board slot	Total I/Os (standard + expansion)
DeviceNet	IA-NT-3206-DV	XSEL-JX-□-□-DV-EEE-□-□	Standard slot	256 input points / 256 output points
	IA-NT-3204-DV	XSEL-KX-□-□-DV-EEE-□-□	Standard slot	256 input points / 256 output points
CC-Link	IA-NT-3206-CC256	XSEL-JX-□-□-CC-EEE-□-□	Standard slot	256 input points / 256 output points
	IA-NT-3204-CC256	XSEL-KX-□-□-CC-EEE-□-□	Standard slot	256 input points / 256 output points
	IA-NT-3204-CC16	XSEL-KX-□-□-N1-EEC-□-□	Standard slot 3	16 input points / 16 output points
		XSEL-KX-□-□-N1-ECC-□-□	Standard slot 2, 3	16 input points x2 / 16 output points x2
		XSEL-KX-□-□-N1-CCC-□-□	Standard slot 1, 2, 3	16 input points x3 / 16 output points x3
ProfiBus	IA-NT-3206-PB	XSEL-JX-□-□-PR-EEE-□-□	Standard slot	256 input points / 256 output points
	IA-NT-3204-PB	XSEL-KX-□-□-PR-EEE--□-□	Standard slot	256 input points / 256 output points
Ethernet	IA-NT-3206-ET	XSEL-JX-□-□-ET-EEE-□-□	Standard slot	Message communication
	IA-NT-3204-ET	XSEL-KX-□-□-ET-EEE-□-□	Standard slot	

■ Multipoint I/O Board & Terminal Block

These board and terminal block are used in cases where the controller requires many PIO points.

System Configuration

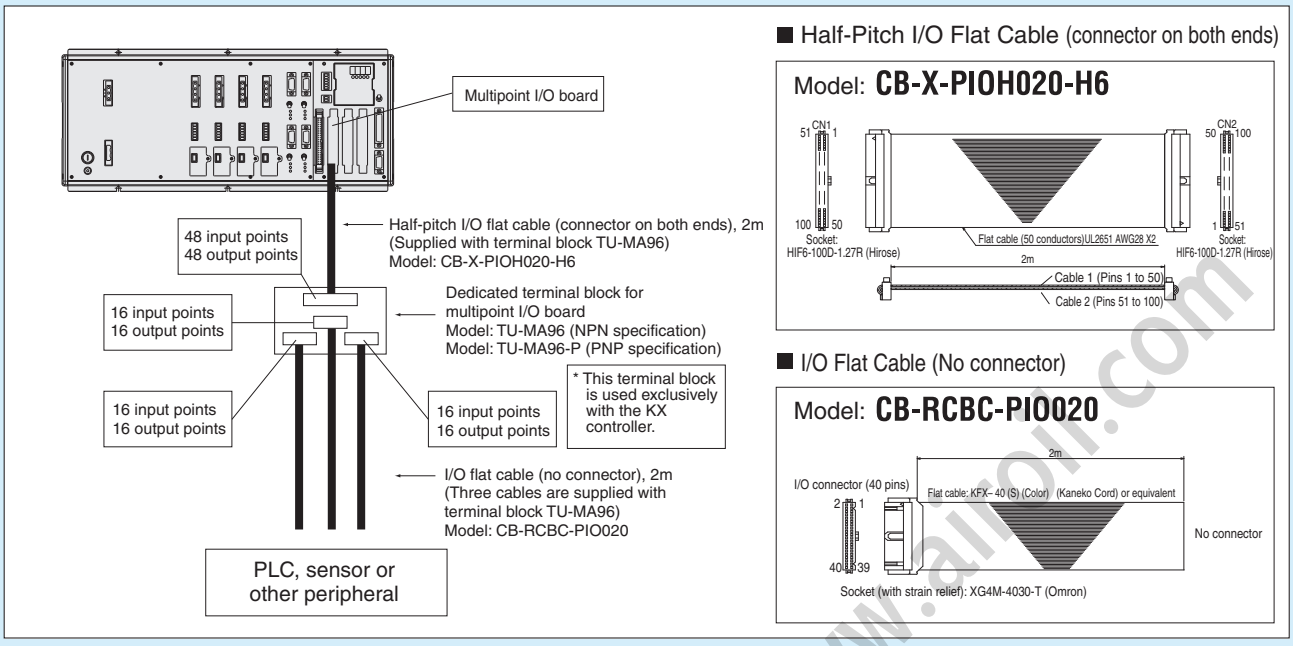

Multipoint I/O Board

Description The half-pitch connector provides 48 input points and 48 output points with a single I/O board. The supplied half-pitch flat cable is difficult to connect due to its thin lead wires, so use a dedicated terminal block for connection to an external device.

Description	Multipoint I/O board model	Order model (controller model)	Multipoint I/O board slot	Total I/Os
48 input points / 48 output points (NPN specification)	IA-IO-3205-NP	XSEL-JX-□-□-N3-EEE-□-□	Standard slot	48 input points / 48 output points
48 input points / 48 output points (PNP specification)	IA-IO-3205-PN	XSEL-JX□-□-P3-EEE-□-□	Standard slot	48 input points / 48 output points
48 input points / 48 output points (NPN specification)	IA-IO-3204-NP	XSEL-KX-□-□-N1-N3EE-□-2	Expansion slots 1	80 input points / 64 output points
		XSEL-KX-□-□-N1-N3N3E-□-2	Expansion slot 1,2	128 input points / 112 output points
		XSEL-KX-□-□-N1-N3N3N3-□-2	Expansion slots 1, 2, 3	176 input points / 160 output points
48 input points / 48 output points (PNP specification)	IA-IO-3204-PN	XSEL-KX-□-□-P1-P3EE-□-2	Expansion slot 1	80 input points / 64 output points
		XSEL-KX-□-□-P1-P3P3E-□-2	Expansion slot 1, 2	128 input points / 112 output points
		XSEL-KX-□-□-P1-P3P3P3-□-2	Expansion slots 1, 2, 3	176 input points / 160 output points

<Dedicated Terminal for Multipoint I/O Board> Used exclusively with the KX controller

Model **TU-MA96** (NPN specification)
TU-MA96-P (PNP specification)

Description This terminal block is used to wire a multipoint I/O board. It not only simplifies the wiring task but also provides the following functions:

1. The transistor buffer circuit ensures an output of 500 mA per point (0.8 A per eight points).
2. The power circuit can be divided into six input systems (each consisting of eight inputs) and six output systems (each consisting of eight outputs).
3. LEDs are provided for checking the power status of output signal circuit.

Total six LEDs are provided, one for each of the six output systems (each consisting of eight outputs). Each LED will turn off when the corresponding power input is cut off or the applicable fuse on the board is blown.

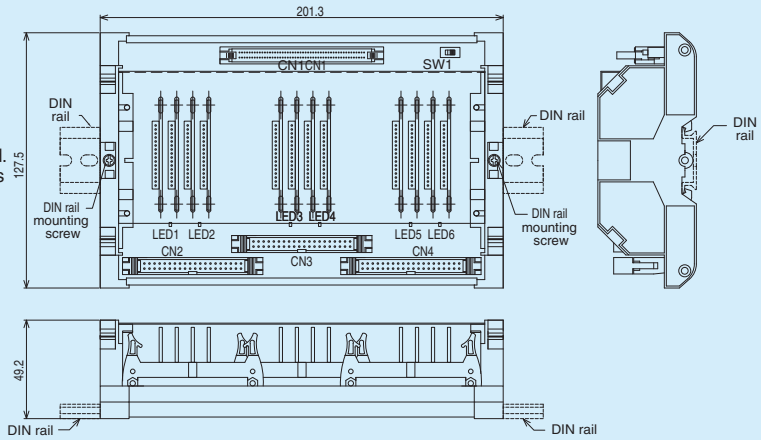

Note If you are using this terminal block, be sure to connect a multipoint I/O board of NPN specification. The connection between the controller and terminal block must be an NPN connection. The connection between the terminal block and user controller will be PNP. (NPN is already selected in the terminal block, so a PNP board cannot be connected.)
This terminal block is designed exclusively for use with the KX controller. (It cannot be used with the JX controller.)

Connector Assignments of Dedicated Terminal Block for Multipoint I/O Board

This connector is used to connect an external I/O device. Each connector accepts 16 DIs and 16 DOs.
External I/O Connector Specifications

Item					
Connector	XG4A-4031(OMRON) 40-pin MIL flat connector				
DI	48 points				
DO	48 points				
Connected unit	External I/O device				
Connector name			CN2 connector	CN3 connector	CN4 connector
Terminal-assigned inputs	1	Common	Common terminal (COM): For IN00 to IN07	Common terminal (COM): For IN16 to IN23	Common terminal (COM): For IN32 to IN39
	2	Common			
	3	General-purpose input	IN00	IN16	IN32
	4	General-purpose input	IN01	IN17	IN33
	5	General-purpose input	IN02	IN18	IN34
	6	General-purpose input	IN03	IN19	IN35
	7	General-purpose input	IN04	IN20	IN36
	8	General-purpose input	IN05	IN21	IN37
	9	General-purpose input	IN06	IN22	IN38
	10	General-purpose input	IN07	IN23	IN39
	11	General-purpose input	IN08	IN24	IN40
	12	General-purpose input	IN09	IN25	IN41
	13	General-purpose input	IN10	IN26	IN42
	14	General-purpose input	IN11	IN27	IN43
	15	General-purpose input	IN12	IN28	IN44
	16	General-purpose input	IN13	IN29	IN45
	17	General-purpose input	IN14	IN30	IN46
	18	General-purpose input	IN15	IN31	IN47
	19	Common	Common terminal (COM): For IN08 to IN15	Common terminal (COM): For IN24 to IN31	Common terminal (COM): For IN40 to IN47
	20	Common			
Terminal-assigned outputs	21	+24V	External 24V power input For OUT00 to OUT07	External 24V power input For OUT16 to OUT23	External 24V power input For OUT32 to OUT39
	22	OV			
	23	General-purpose output	OUT00	OUT16	OUT32
	24	General-purpose output	OUT01	OUT17	OUT33
	25	General-purpose output	OUT02	OUT18	OUT34
	26	General-purpose output	OUT03	OUT19	OUT35
	27	General-purpose output	OUT04	OUT20	OUT36
	28	General-purpose output	OUT05	OUT21	OUT37
	29	General-purpose output	OUT06	OUT22	OUT38
	30	General-purpose output	OUT07	OUT23	OUT39
	31	General-purpose output	OUT08	OUT24	OUT40
	32	General-purpose output	OUT09	OUT25	OUT41
	33	General-purpose output	OUT10	OUT26	OUT42
	34	General-purpose output	OUT11	OUT27	OUT43
	35	General-purpose output	OUT12	OUT28	OUT44
	36	General-purpose output	OUT13	OUT29	OUT45
	37	General-purpose output	OUT14	OUT30	OUT46
	38	General-purpose output	OUT15	OUT31	OUT47
	39	+24V	External 24V power input For OUT08 to OUT15	External 24V power input For OUT24 to OUT31	External 24V power input For OUT40 to OUT47
	40	OV			

Catalog No.: IX-CJ0061-2A-Apr0605-1

Quality and Innovation

IAI America, Inc.
Head Office 2690W 237th Street Torrance CA 90505
TEL: 1-800-736-1712
Chicago Office: 1261 Hamilton Parkway Itasca, IL 60143
TEL: 1-800-944-0333
New Jersey Office: 7 South Main Street, Suite-F, Marlboro, NJ 07746
TEL: 732-683-9101

IAI Industrieroboter GmbH
Ober der Röth 4, D-65824 Schwalbach am Taunus, Germany

Home page: www.Intelligentactuator.com